DATE	REV	REVISION (+ ADD, − REMOVE, ± WAS)	DR BY	CK BY
11/2/89	A	WAS WRONG AT 48"	DT	
11/2/89	B	WAS WRONG AT 24	DT	
11/21/89	C	WAS 502 REFRIGERANT	DT	

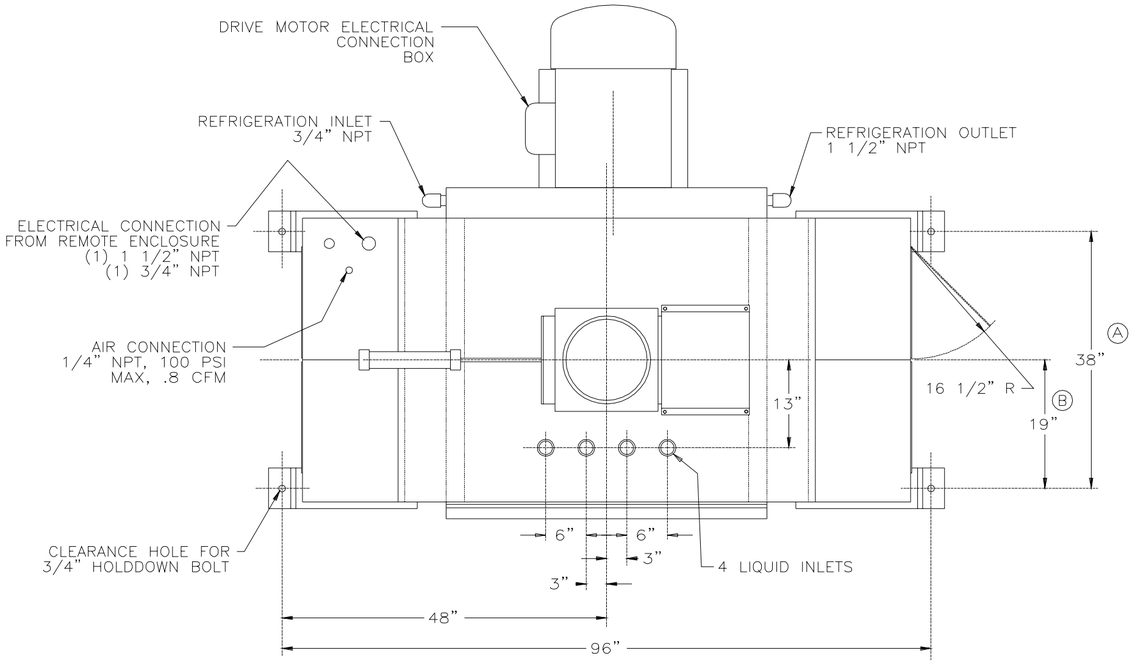

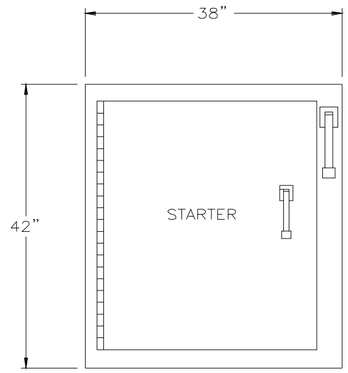

REMOTE MOUNTED NEMA 12
ELECTRICAL ENCLOSURES

MIXER FEATURES:

75/37 1/2 HP 1800/900 RPM TEFC DRIVE MOTOR.
460 VOLT 60 HERTZ 3 PHASE WITH FULL MAGNETIC CONTROL CIRCUIT.
NEMA 12 DUST TIGHT ENCLOSURE WITH CIRCUIT BREAKER.
SOLID STAINLESS STEEL BOWL SHEET.
SOLID STAINLESS STEEL BOWL ENDS.
SOLID STAINLESS STEEL HD BOWL COVER W/ REAR STIFFENER.
SOLID STAINLESS STEEL AGITATOR SHAFT.
SOLID STAINLESS STEEL REMOVABLE DRIP PAN.
SOLID STAINLESS STEEL ROLLER BAR AGITATOR.
SOLID STAINLESS STEEL EXTERIOR.
SOLID STAINLESS STEEL HD DX JACKET WITH BOWL
Ⓒ END COOLING (FREON R−500 REFRIGERANT).
AGITATOR SPEEDS 35 RPM LOW 70 RPM HIGH.
PNEUMATIC POWERED FLOUR GATE−HD.
SANITARY REMOVABLE SHAFT SEALS.
HIGH / LOW SPEED JOG OPERATION.
AUTOMATIC ELECTRIC CHAIN OILER.
MECHANICAL DIAL TYPE BOWL THERMOMETER.
VIBRO PADS (SHIPPED LOOSE).
HYDRAULIC BOWL TILT WITH DUAL CYLINDERS.

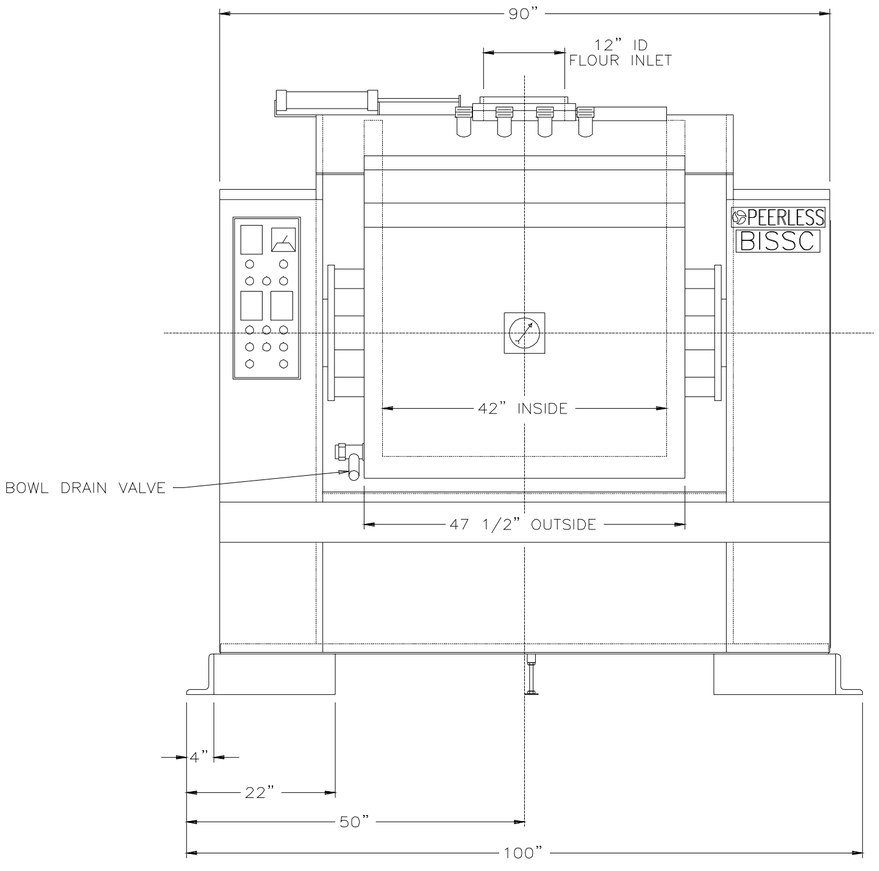

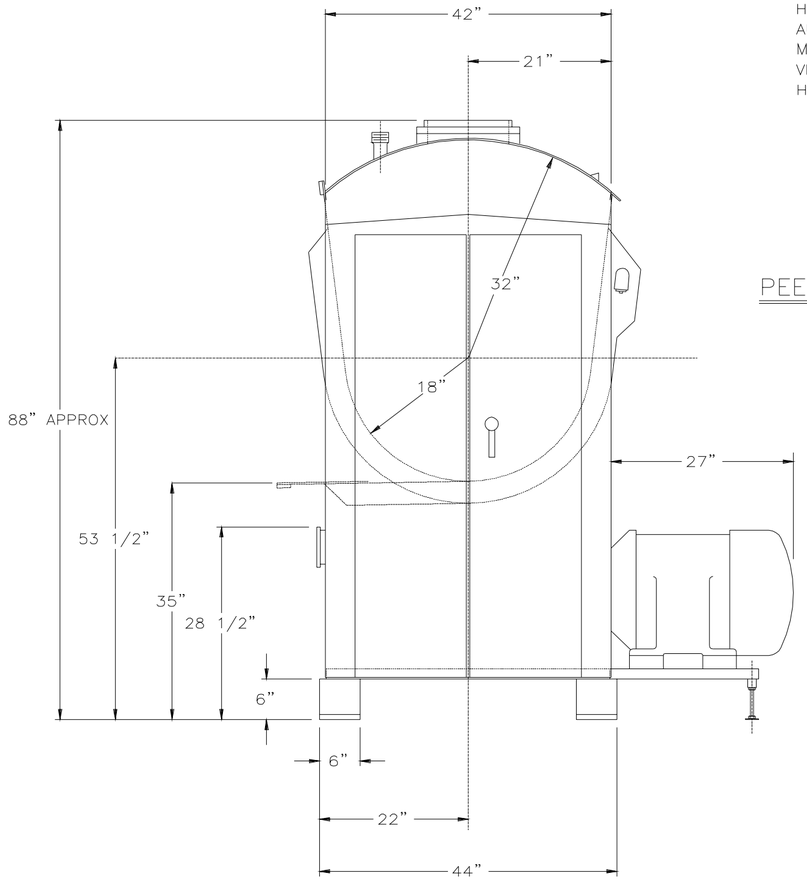

PEERLESS MODEL 555HS HIGH SPEED MIXER

FOR: MAIERS BAKERY
F.O. # 89057
P.O. #5608

PEERLESS MACHINERY CORPORATION
SIDNEY, OHIO

TOLERANCES (UNLESS OTHERWISE SPECIFIED)
DECIMAL .XX=±.01 ANGLES ± 1° FRACTIONAL ± 1/32
.XXX=±.005 BREAK ALL EDGES

MATERIAL	DRAWN BY D THOMAS
	APPROVED BY
SCALE 1"=1'	TITLE CERTIFIED DATA SHEET
DATE 9/13/89	DRAWING NUMBER CDS−218
	FILE NUMBER D6−63