Instructions - Parts

# InvisiPac™
# HM25 and HM50 Tank-Free™ Hot Melt Delivery System

333347ZAE

EN

***For delivering and dispensing hot melt adhesive pellets. For professional use only. Not approved for use in explosive atmospheres or hazardous locations.***

*1200 psi (8.3 MPa, 83 bar) Maximum Working Pressure*
*400°F (204°C) Maximum Fluid Operating Temperature*
*100 psi (0.7 MPa,7 bar) Maximum Air Inlet Pressure*

## Important Safety Instructions

Read all warnings and instructions in this manual before using the equipment. Be familiar with the proper control and usage of the equipment. Save these instructions.

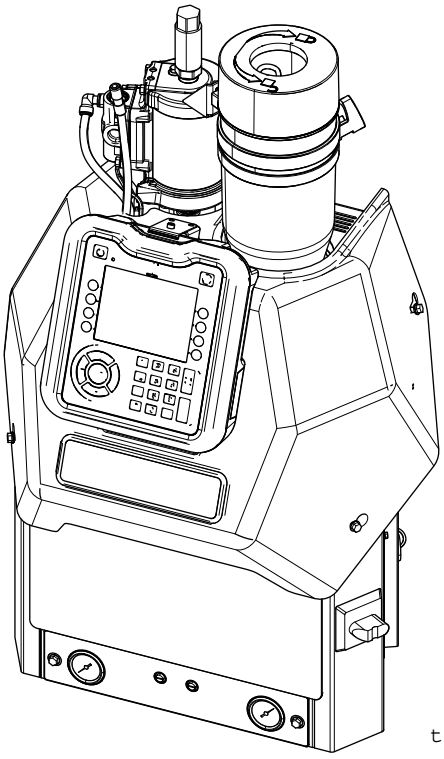

ti22732

PROVEN QUALITY. LEADING TECHNOLOGY.

Intertek
9902471
3143485
Certified to
CAN/CSA C22.2 No. 88
Conforms to
ANSI/UL 499

# Contents


**Required Tools . . . . . 3**
**Models . . . . . 4**
**Safety Symbols . . . . . 9**
**Warnings . . . . . 10**
**Component Identification . . . . . 13**
**Setup . . . . . 18**
Grounding . . . . . 18
Location . . . . . 18
Attach Components . . . . . 18
Recommended Air Setup . . . . . 22
Connect Electrical Cord . . . . . 23
208V Electrical Circuits . . . . . 24
Select ADM Settings . . . . . 24
Applicators . . . . . 26
PLC Connection . . . . . 27
Material Tracking . . . . . 29
Calibration . . . . . 31
**Operation . . . . . 33**
Overview . . . . . 33
Initial Startup and Prime . . . . . 33
Manual Refill . . . . . 35
Automatic Refill . . . . . 36
Dispense . . . . . 36
Shutdown . . . . . 37
Schedule . . . . . 37
Pressure Relief Procedure . . . . . 38
Drain the System . . . . . 38
Flush . . . . . 39
Operation Tips to Minimize Charring . . . . . 40
**Maintenance . . . . . 41**
Replace Outlet Filter . . . . . 41
Replace Inlet Filter . . . . . 41
Replace Funnel Filter . . . . . 42
Filter Maintenance Guidelines* . . . . . 43
**Troubleshooting . . . . . 44**
ADM Error Code Table . . . . . 44
MZLP Troubleshooting . . . . . 60
**Repair . . . . . 61**
Pump . . . . . 61
Melter . . . . . 66
Multi-Zone Low Power Temperature Control Module (MZLP) . . . . . 73
System . . . . . 76
Air Controls . . . . . 79
Air Motor . . . . . 80
Transformer Fan . . . . . 83
Software Update Procedure . . . . . 84
Incoming Power . . . . . 85
Cable Identification . . . . . 85
**Air Schematic . . . . . 91**
**Parts . . . . . 92**
**Accessories . . . . . 110**
Preventative Maintenance Kits . . . . . 111
Complete Maintenance Kits . . . . . 111
Non-Graco Applicator Adapter Cables . . . . . 112
Air Adjustment Lock, 24R084 . . . . . 113
Feed Sensor Dedicated Air Kit, 17F699 . . . . . 113
System Stand, 24R088 . . . . . 114
Caster for Stand, 120302 . . . . . 114
Adapter Plate, 24R083 . . . . . 114
Air Reservoir Kit, 16W366 . . . . . 116
ADM Extension Kits . . . . . 124
ADM Remote Mount Bracket, 24A326 . . . . . 124
Overtemperature Jumper, 16Y727 . . . . . 124
Air Metric Fitting Kit, 24W637 . . . . . 124
Strain Relief Bushing Kit, 24X190 . . . . . 125
Hose Straps (4 Pack), 240296 . . . . . 125
Pressure Gauge Replacement Kit, 24U635 . . . 125
400VAC and 480VAC Transformer Kits . . . . . 125
Adapter Cable . . . . . 125
**Appendix A - ADM . . . . . 126**
General Operation . . . . . 126
Icon Identification . . . . . 126
**Appendix B - USB Downloading, Uploading . . . 133**
Download Procedure . . . . . 133
Accessing Files . . . . . 133
Upload Procedure . . . . . 133
USB Logs . . . . . 134
System Settings File . . . . . 134
System Language File . . . . . 135
**Technical Data . . . . . 136**

**Dimensions . . . . . 140**
**Graco Extended Warranty . . . . . 142**
**Graco Information . . . . . 142**

# Related Manuals

Manuals are available at www.graco.com. Component manuals in English:

| Part | Description |
|---|---|
| 334629 | InvisiPac Advanced Feed System |
| 334627 | InvisiPac GM100 Plug-Free Hot Melt Applicator |
| 3A4937 | InvisiPac HM25c Feed System |
| 3A2805 | InvisiPac GS35 Hot Melt Applicator Instructions - Parts |
| 332072 | InvisiPac Heated Hose Instructions - Parts |
| 333348 | MZLP Fuse Kit, Instructions |
| 333349 | InvisiPac 480V Transformer Upgrade Kit, Instructions-Parts |
| 334784 | InvisiPac Pattern Controller, Operations-Repair-Parts |
| 335010 | Dedicated Feed Sensor Air Kit |

# Required Tools

- Standard allen wrench set
- Metric allen wrench set
- Various sizes of crescent wrenches
- 11/16 in. wrench
- 3/8 in. ratchet
- 3/8 in. socket
- 5/16 in. driver
- 7/16 in. socket
- 7/8 in. deep well socket
- 1 in. socket
- 13 mm socket
- 10 mm socket
- 1/2 in. ratchet
- Side cutter
- Phillips head screwdriver
- Flat head screwdriver
- Multimeter
- Tubing cutter

# Models

## Feed Systems

| Part | Usage |
|---|---|
| 25C193<br>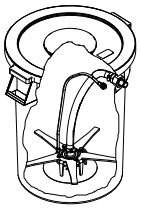<br>ti | For use in standard pellet feed applications |
| 17D749<br>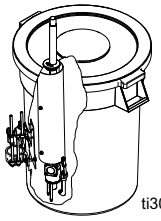<br>ti30666a | For use in chicklet feed applications |
| 24N957<br>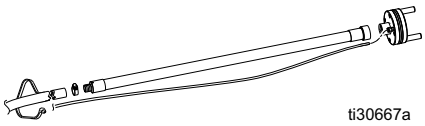<br>ti30667a | For use in standard pellet feed applications with separate feed bin or bulk container |

# 200-240 VAC, 350-415 VAC HM50 Models

| System | Channels | Voltage | Φ Type | Description | Max Amps |
|---|---|---|---|---|---|
| 24T918<br>24Y114* | 2 | 200-240 VAC | 1Φ / PE ⏚ | • 1-Phase<br>• 2 wire and PE ⏚<br>• 50/60 Hz | 32A |
| | | 200-240 VAC Δ | 3Φ / PE ⏚ | • 3-Phase without Neutral<br>• 3 wire and PE ⏚<br>• 50/60 Hz | 27A |
| | | 300-415 VAC Y | 3Φ / Neutral / PE ⏚ | • 3-Phase with Neutral<br>• 350-415 VAC Line to Line<br>• 200-240 VAC Line to Neutral<br>• 3 wire, Neutral, and PE ⏚<br>• 50/60 Hz | 16A |
| 24T919<br>24Y115* | 4 | 200-240 VAC | 1Φ / PE ⏚ | • 1-Phase<br>• 2 wire and PE ⏚<br>• 50/60 Hz | 40A |
| | | 200-240 VAC Δ | 3Φ / PE ⏚ | • 3-Phase without Neutral<br>• 3 wire and PE ⏚<br>• 50/60 Hz | 27A |
| | | 300-415 VAC Y | 3Φ / Neutral / PE ⏚ | • 3-Phase with Neutral<br>• 350-415 VAC Line to Line<br>• 200-240 VAC Line to Neutral<br>• 3 wire, Neutral, and PE ⏚<br>• 50/60 Hz | 16A |
| 24T920 | 6 | 200-240 VAC | 1Φ / PE ⏚ | • 1-Phase<br>• 2 wire and PE ⏚<br>• 50/60 Hz | 40A |
| | | 200-240 VAC Δ | 3Φ / PE ⏚ | • 3-Phase without Neutral<br>• 3 wire and PE ⏚<br>• 50/60 Hz | 40A |
| | | 300-415 VAC Y | 3Φ / Neutral / PE ⏚ | • 3-Phase with Neutral<br>• 350-415 VAC Line to Line<br>• 200-240 VAC Line to Neutral<br>• 3 wire, Neutral, and PE ⏚<br>• 50/60 Hz | 30A |

* System comes with internal PC-8 pattern controller installed. To upgrade to PC-8e, order kit PN 17F712.

# 200-240 VAC, 350-415 VAC HM25 Models

| System | Channels | Voltage | Φ Type | Description | Max Amps |
|---|---|---|---|---|---|
| 24V423<br>24Y102* | 2 | 200-240 VAC | 1Φ / PE ⏚ | • 1-Phase<br>• 2 wire and PE ⏚<br>• 50/60 Hz | 32A |
| | | 200-240 VAC Δ | 3Φ / PE ⏚ | • 3-Phase without Neutral<br>• 3 wire and PE ⏚<br>• 50/60 Hz | 27A |
| | | 300-415 VAC Y | 3Φ / Neutral / PE ⏚ | • 3-Phase with Neutral<br>• 350-415 VAC Line to Line<br>• 200-240 VAC Line to Neutral<br>• 3 wire, Neutral, and PE ⏚<br>• 50/60 Hz | 16A |
| 24V424<br>24Y103* | 4 | 200-240 VAC | 1Φ / PE ⏚ | • 1-Phase<br>• 2 wire and PE ⏚<br>• 50/60 Hz | 40A |
| | | 200-240 VAC Δ | 3Φ / PE ⏚ | • 3-Phase without Neutral<br>• 3 wire and PE ⏚<br>• 50/60 Hz | 27A |
| | | 300-415 VAC Y | 3Φ / Neutral / PE ⏚ | • 3-Phase with Neutral<br>• 350-415 VAC Line to Line<br>• 200-240 VAC Line to Neutral<br>• 3 wire, Neutral, and PE ⏚<br>• 50/60 Hz | 16A |
| 24V425 | 6 | 200-240 VAC | 1Φ / PE ⏚ | • 1-Phase<br>• 2 wire and PE ⏚<br>• 50/60 Hz | 40A |
| | | 200-240 VAC Δ | 3Φ / PE ⏚ | • 3-Phase without Neutral<br>• 3 wire and PE ⏚<br>• 50/60 Hz | 40A |
| | | 300-415 VAC Y | 3Φ / Neutral / PE ⏚ | • 3-Phase with Neutral<br>• 350-415 VAC Line to Line<br>• 200-240 VAC Line to Neutral<br>• 3 wire, Neutral, and PE ⏚<br>• 50/60 Hz | 30A |

* System comes with internal PC-8 pattern controller installed. To upgrade to PC-8e, order kit PN 17F712.

# 400 VAC Transformer HM25 Models

| System | Channels | Voltage | Φ Type | Description | Max Amps |
|---|---|---|---|---|---|
| 24V426<br>24Y104* | 2 | 335-400 VAC | 3Φ / PE ⏚ | • 3-Phase without Neutral<br>• 3wire and PE ⏚<br>• 50/60 Hz | 17A |
| 24V427<br>24Y105* | 4 | 335-400 VAC | 3Φ / PE ⏚ | • 3-Phase without Neutral<br>• 3 wire and PE ⏚<br>• 50/60 Hz | 17A |
| 24V428 | 6 | 335-400 VAC | 3Φ /PE ⏚ | • 3-Phase without Neutral<br>• 3 wire and PE ⏚<br>• 50/60 Hz | 17A |

# 400 VAC Transformer HM50 Models

| System | Channels | Voltage | Φ Type | Description | Max Amps |
|---|---|---|---|---|---|
| 24V198<br>24Y116* | 2 | 335-400 VAC | 3Φ / PE ⏚ | • 3-Phase without Neutral<br>• 3wire and PE ⏚<br>• 50/60 Hz | 17A |
| 24V199<br>24Y117* | 4 | 335-400 VAC | 3Φ / PE ⏚ | • 3-Phase without Neutral<br>• 3 wire and PE ⏚<br>• 50/60 Hz | 17A |
| 24V200 | 6 | 335-400 VAC | 3Φ /PE ⏚ | • 3-Phase without Neutral<br>• 3 wire and PE ⏚<br>• 50/60 Hz | 17A |

* System comes with internal PC-8 pattern controller installed. To upgrade to PC-8e, order kit PN 17F712.

# 480 VAC Transformer HM25 Models

| System | Channels | Voltage | Φ Type | Description | Max Amps |
|---|---|---|---|---|---|
| 24V429<br>24Y106* | 2 | 400-480 VAC | 3Φ / PE ⏚ | • 3-Phase without Neutral<br>• 3wire and PE ⏚<br>• 50/60 Hz | 14A |
| 24V430<br>24Y107* | 4 | 400-480 VAC | 3Φ / PE ⏚ | • 3-Phase without Neutral<br>• 3 wire and PE ⏚<br>• 50/60 Hz | 14A |
| 24V431 | 6 | 400-480 VAC | 3Φ /PE ⏚ | • 3-Phase without Neutral<br>• 3 wire and PE ⏚<br>• 50/60 Hz | 14A |

# 480 VAC Transformer HM50 Models

| System | Channels | Voltage | Φ Type | Description | Max Amps |
|---|---|---|---|---|---|
| 24V201<br>24Y118* | 2 | 400-480 VAC | 3Φ / PE ⏚ | • 3-Phase without Neutral<br>• 3wire and PE ⏚<br>• 50/60 Hz | 14A |
| 24V202<br>24Y119* | 4 | 400-480 VAC | 3Φ / PE ⏚ | • 3-Phase without Neutral<br>• 3 wire and PE ⏚<br>• 50/60 Hz | 14A |
| 24V203 | 6 | 400-480 VAC | 3Φ /PE ⏚ | • 3-Phase without Neutral<br>• 3 wire and PE ⏚<br>• 50/60 Hz | 14A |

* System comes with internal PC-8 pattern controller installed. To upgrade to PC-8e, order kit PN 17F712.

# Safety Symbols

The following safety symbols appear throughout this manual and on warning labels. Read the table below to understand what each symbol means.

| Symbol | Meaning |
|---|---|
|  | **Burn Hazard** |
|  | **Cleaning Solvent Hazard** |
|  | **Electric Shock Hazard** |
|  | **Equipment Misuse Hazard** |
|  | **Fire and Explosion Hazard** |
|  | **Moving Parts Hazard** |
|  | **Skin Injection Hazard** |
|  | **Skin Injection Hazard** |
|  | **Splatter Hazard** |
|  | **Toxic Fluid or Fumes Hazard** |
| 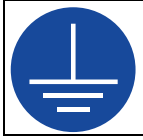 | **Ground Equipment** |

| | |
|---|---|
|   | **Follow Pressure Relief Procedure** |
|  | **Ventilate Work Area** |
| 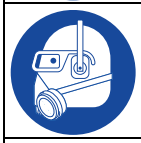 | **Wear Personal Protective Equipment** |
|  | **Eliminate Ignition Sources** |
|  | **Do Not Stop Leaks with Hand, Body, Glove or Rag** |
|  | **Do Not Place Hands or Other Body Parts Near Fluid Outlet** |

# Warnings

The following warnings apply throughout this manual. Read, understand, and follow the warnings before using this equipment. Failure to follow these warnings can result in serious injury.

## ⚠ DANGER




**SEVERE ELECTRIC SHOCK HAZARD**

This equipment is powered by more than 240 V. Contact with this voltage will cause death or serious injury.

- Turn off and disconnect all power before disconnecting any cables and before servicing equipment.
- This equipment must be grounded. Connect only to grounded power source.
- All electrical wiring must be done by a qualified electrician and comply with all local codes and regulations.

## ⚠ WARNING



**BURN HAZARD**

Equipment surfaces and fluid that is heated can become very hot during operation. To avoid severe burns:

- Do not touch hot fluid or equipment.








**SKIN INJECTION HAZARD**

High-pressure fluid from dispensing device, hose leaks, or ruptured components will pierce skin. This may look like just a cut, but it is a serious injury that can result in amputation. **Get immediate surgical treatment.**

- Do not point dispensing device at anyone or at any part of the body.
- Do not put your hand over the fluid outlet.
- Do not stop or deflect leaks with your hand, body, glove, or rag.
- Follow the **Pressure Relief Procedure** when you stop dispensing and before cleaning, checking, or servicing equipment.
- Tighten all fluid connections before operating the equipment.
- Check hoses and couplings daily. Replace worn or damaged parts immediately.

# ⚠ WARNING






**MOVING PARTS HAZARD**

Moving parts can pinch, cut or amputate fingers and other body parts.

- Keep clear of moving parts.
- Do not operate equipment with protective guards or covers removed.
- Pressurized equipment can start without warning. Before checking, moving, or servicing equipment, follow the **Pressure Relief Procedure** and disconnect all power sources.






**EQUIPMENT MISUSE HAZARD**

Misuse can cause death or serious injury.

- Do not operate the unit when fatigued or under the influence of drugs or alcohol.
- Do not exceed the maximum working pressure or temperature rating of the lowest rated system component. See **Technical Data** in all equipment manuals.
- Use fluids and solvents that are compatible with equipment wetted parts. See Technical Data in all equipment manuals. Read fluid and solvent manufacturer's warnings. For complete information about your material, request MSDS from distributor or retailer.
- Do not leave the work area while equipment is energized or under pressure.
- Turn off all equipment and follow the **Pressure Relief Procedure** when equipment is not in use.
- Check equipment daily. Repair or replace worn or damaged parts immediately with genuine manufacturer's replacement parts only.
- Do not alter or modify equipment. Alterations or modifications may void agency approvals and create safety hazards.
- Make sure all equipment is rated and approved for the environment in which you are using it.
- Use equipment only for its intended purpose. Call your distributor for information.
- Route hoses and cables away from traffic areas, sharp edges, moving parts, and hot surfaces.
- Do not kink or over bend hoses or use hoses to pull equipment.
- Keep children and animals away from work area.
- Comply with all applicable safety regulations.









**FIRE AND EXPLOSION HAZARD**

Flammable fumes, such as solvent and paint fumes, in **work area** can ignite or explode. To help prevent fire and explosion:

- Do not use solvent-based adhesives that can create an explosive atmosphere when processed.
- Use equipment only in well ventilated area.
- Eliminate all ignition sources; such as pilot lights, cigarettes, portable electric lamps, and plastic drop cloths (potential static arc).
- Keep work area free of debris, including solvent, rags and gasoline.
- Do not plug or unplug power cords, or turn power or light switches on or off when flammable fumes are present.
- Ground all equipment in the work area. See **Grounding** instructions.
- Use only grounded hoses.
- **Stop operation immediately** if static sparking occurs or you feel a shock**.** Do not use equipment until you identify and correct the problem.
- Keep a working fire extinguisher in the work area.

# ⚠ WARNING



**TOXIC FLUID OR FUMES HAZARD**

Toxic fluids or fumes can cause serious injury or death if splashed in the eyes or on skin, inhaled, or swallowed.

- Read MSDSs to know the specific hazards of the fluids you are using.
- Store hazardous fluid in approved containers, and dispose of it according to applicable guidelines.



**PERSONAL PROTECTIVE EQUIPMENT**

Wear appropriate protective equipment when in the work area to help prevent serious injury, including eye injury, hearing loss, inhalation of toxic fumes, and burns. Protective equipment includes but is not limited to:

- Protective eyewear, and hearing protection.
- Respirators, protective clothing, and gloves as recommended by the fluid and solvent manufacturer.



**PRESSURIZED ALUMINUM PARTS HAZARD**

Use of fluids that are incompatible with aluminum in pressurized equipment can cause serious chemical reaction and equipment rupture. Failure to follow this warning can result in death, serious injury, or property damage.

- Do not use 1,1,1-trichloroethane, methylene chloride, other halogenated hydrocarbon solvents or fluids containing such solvents.
- Many other fluids may contain chemicals that can react with aluminum. Contact your material supplier for compatibility.

# Component Identification

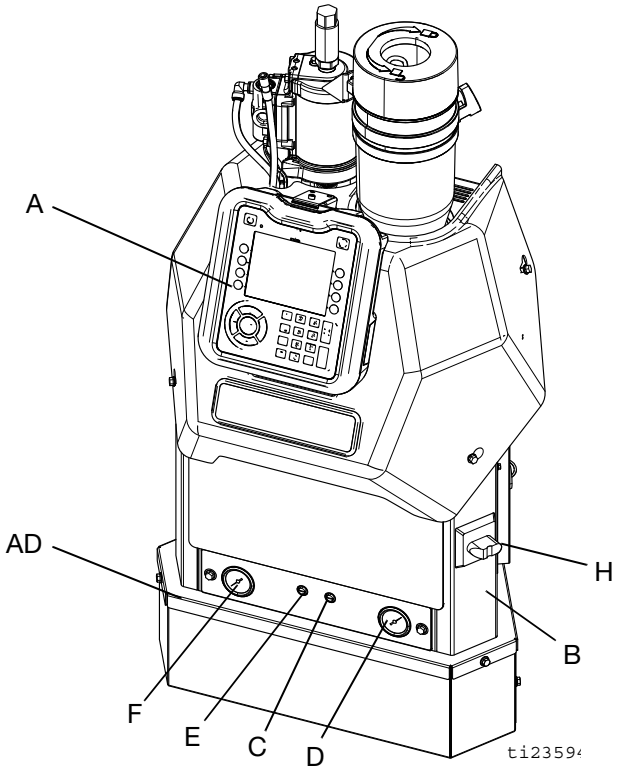


**Key:**

A Advanced Display Module (ADM)
B Electrical Enclosure
C Pump Air Pressure Regulator
D Pump Air Pressure Gauge
E Vacuum Transfer Air Pressure Regulator
F Vacuum Transfer Air Pressure Gauge
H Main Power Switch
J System Air Inlet
L Air Motor and Pump
M Incoming Power Strain Relief
N Heated Fluid Manifold (Melter)
P Multi-Zone Low Power Temperature Control Module (MZLP)
R Fluid Outlets for connection to Heated Hoses (numbered 1-6)
S Customer I/O Cable (optional)
AC Drain Port
AD Transformer (optional)

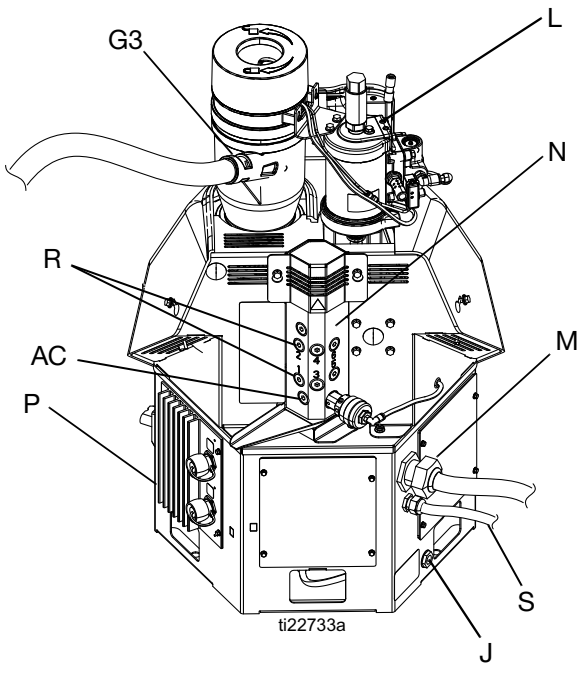


**FIG. 1**

# Heated Fluid Manifold

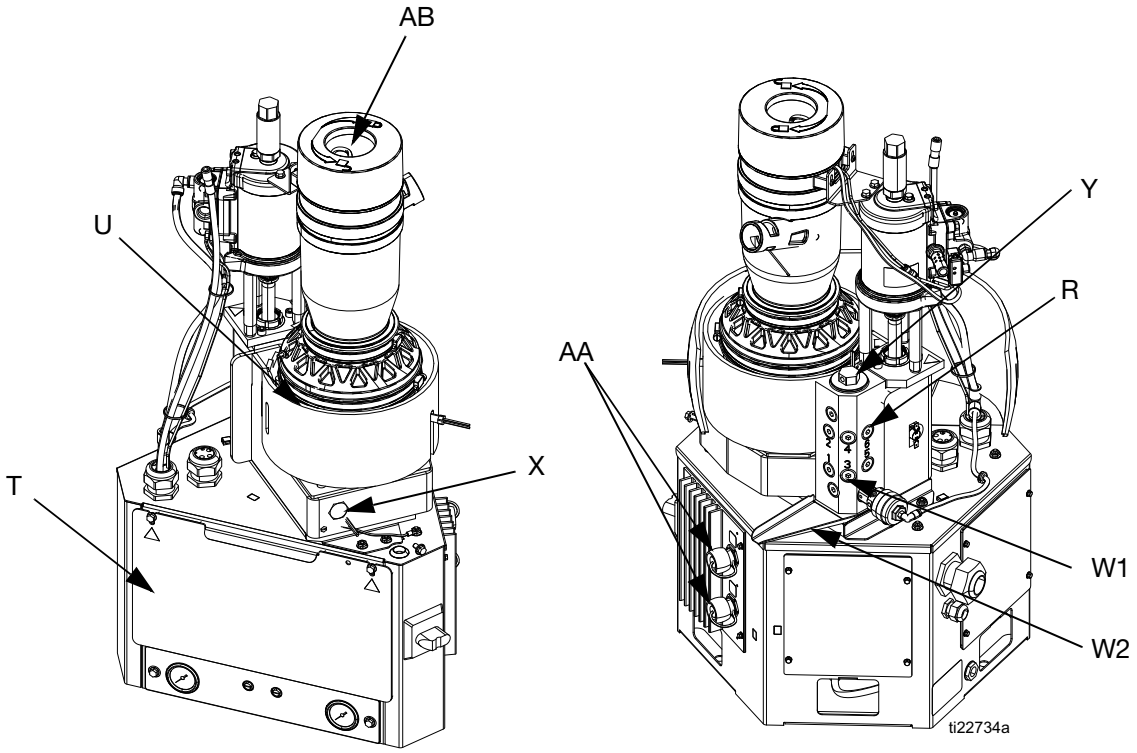


**NOTE:** System shown with plastic and metal shrouds removed.

**FIG. 2**

**Key:**

T Electrical Enclosure Front Access Door
U Melter
W1 Drain Port
W2 Drain Tray
X Inlet Filter (Low Pressure - Before Pump)
Y Outlet Filter (High Pressure - After Pump)
Z Adhesive Pellets Level Sensor (not shown; inside funnel)
AA Power and RTD Harness Connection to Heated Hose and Applicator (harness connects from system to heated hose then from heated hose to applicator)
AB Inlet Funnel Screen

# Electrical Enclosure

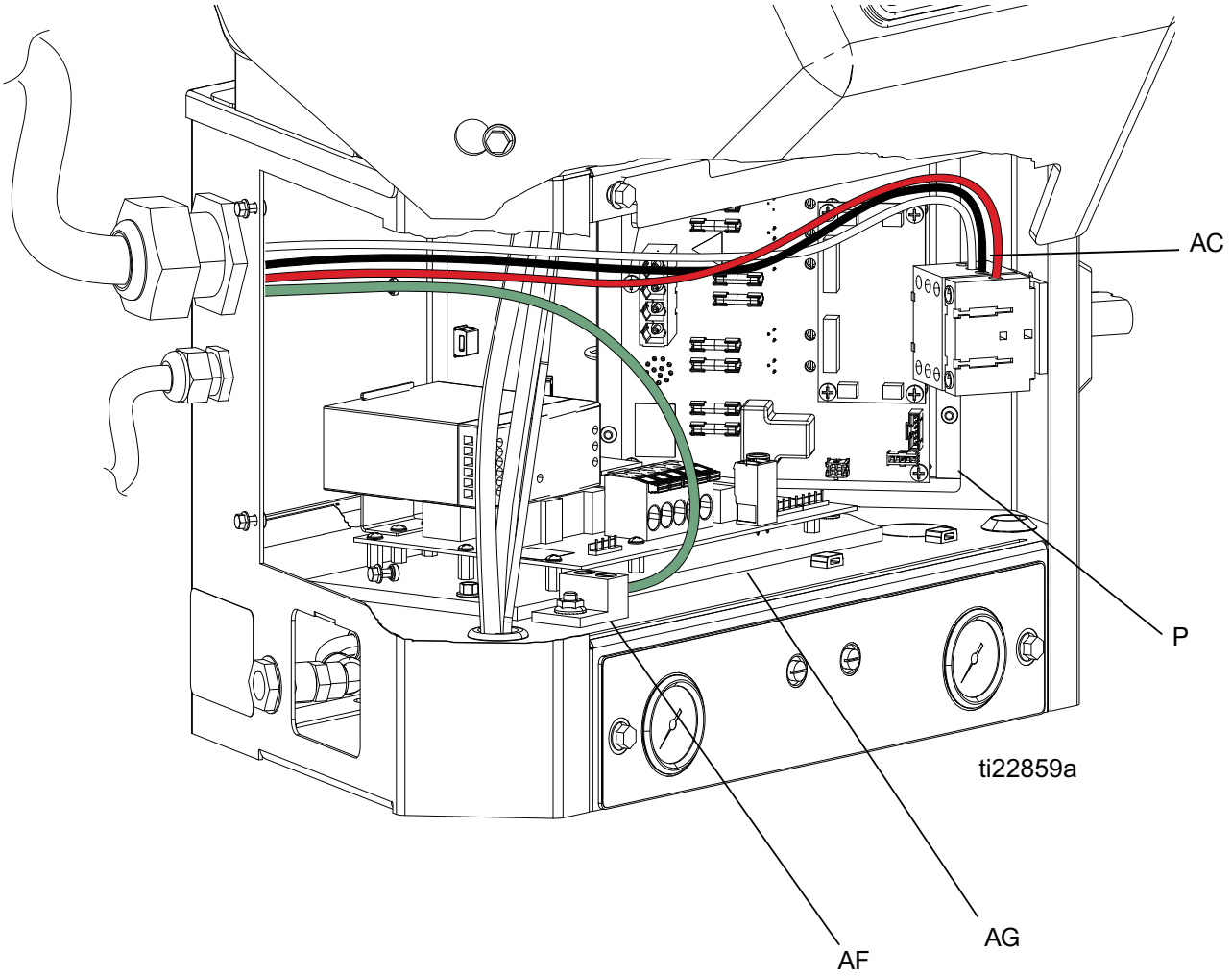


**FIG. 3**

**Key:**

P Multi-Zone Low Power Temperature Control Module (MZLP)
AC Incoming Power Connection
AF Chassis Ground
AG Automatic Wiring Board (AWB)

# Advanced Display Module (ADM)

## User Interface

**NOTICE**

To prevent damage to soft key buttons, do not press the buttons with sharp objects such as pens, plastic cards, or fingernails.

**NOTE:** See **400VAC and 480VAC Transformer Kits** on page 125 for complete ADM operation details.

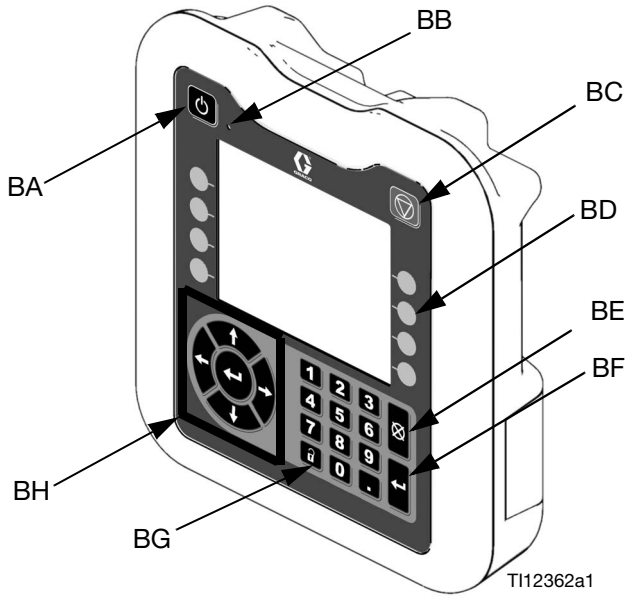


**FIG. 4**

| Key | Function |
|---|---|
| BA | Heating system and pump enable/disable |
| BB | System status indicator (LED) |
| BC | Stop all system processes |
| BD | Defined by icon next to softkey |
| BE | Abort current operation |
| BF | Accept change, acknowledge error, select item, toggle selected item |
| BG | Toggle between Operation and Setup screens |
| BH | Navigate within a screen or to a new screen |

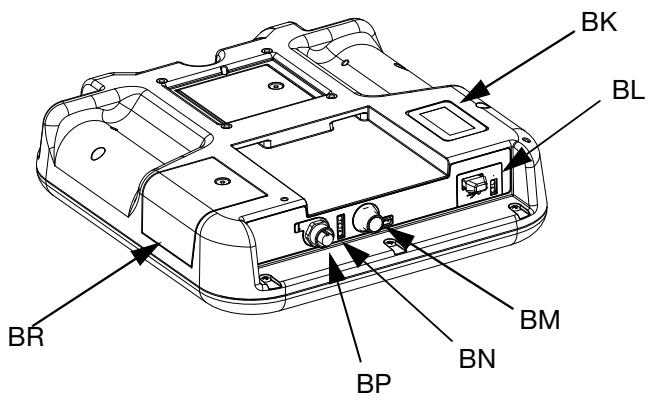


**FIG. 5**

**Key:**

BK Part Number Identification Label
BL USB Interface
BM CAN Cable Connection (Power Supply and Communication)
BN Module Status LEDs
BP (Not used)
BR Software Token Access Panel

## Screen Components

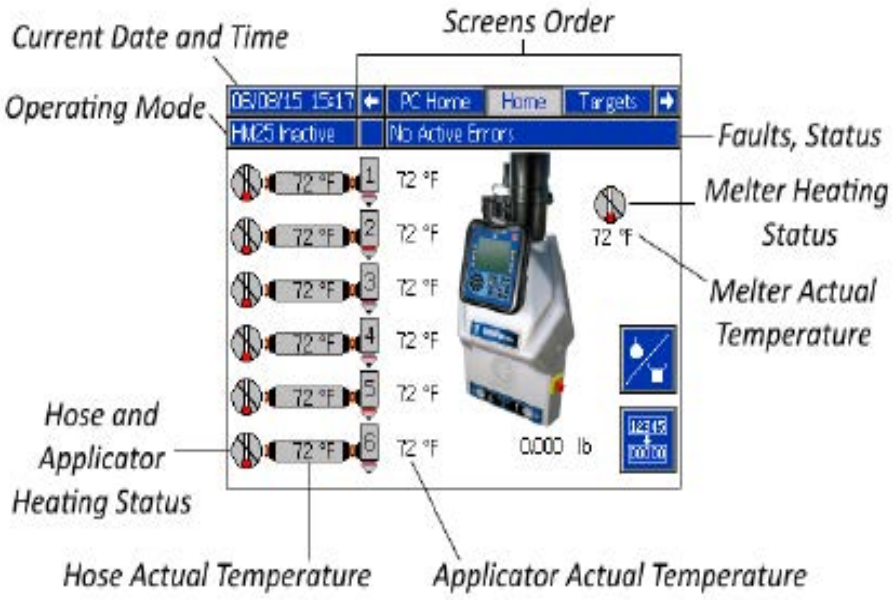


**FIG. 6: Main Screen Components**

| Operating Mode | Description | Component Status |
|---|---|---|
| System Off | The system doesn't have power. | • No System Status Indicator LED on the ADM<br>• No heat<br>• Pump is off |
| Inactive | The heating system and pumps are disabled. | • Yellow system status indicator LED on the ADM<br>• No heat<br>• Pump is off |
| Warm Up | The system is heating the material to the set temperature. | • Flashing green system status indicator LED on the ADM<br>• Heat is increasing to setpoint temperature<br>• Pump is off |
| Active | The system is ready to dispense material. | • Solid green system status indicator LED on the ADM<br>• Heat is at setpoint temperature<br>• Pump is on |

# Setup

## Grounding

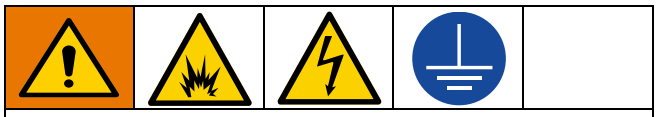

The equipment must be grounded to reduce the risk of static sparking and electric shock. Electric or static sparking can cause fumes to ignite or explode. Improper grounding can cause electric shock. Grounding provides an escape wire for the electric current.

The InvisiPac system is equipped with a ground terminal. A qualified electrician must ground the system using this terminal. See **Connect Electrical Cord** on page 23.

## Location

Ambient temperature must be 32-120°F (0-49°C).

The supplied vacuum transfer hose length is 10 ft (3 m). The maximum vacuum transfer hose length available is 30 ft (9.1 m). The adhesive pellets container must be located within reach of the vacuum transfer hose and no more than 30 ft (9.1 m) away.

The applicator(s) must be located no more than 25 ft (7.6 m) from the melter.

Place the base system on a surface that is eye-level for easiest operation. Use **System Stand, 24R088**, to install system at eye-level. See page 114.

If installing the system in place of a non-Graco hot melt system, purchase **Adapter Plate, 24R083**. See page 114.

To make repairing the system easier, locate the system so that all sides are easily accessible and have sufficient lighting.

## Attach Components



To reduce the risk of electric shock, do not connect electrical cord until after this **Attach Components** procedure is complete.

Only systems with transformers are supplied with a lifting strap.

***NOTICE***

To prevent strain on electrical or mechanical connections around the pump assembly, loop the strap around the tie rods as shown.

1. Use supplied lifting strap 127735, to transport systems with transformers. Wrap strap around all three pump tie rods and loop the strap back through itself in the Choker Configuration. See strap for details. See FIG. 7, page 18.

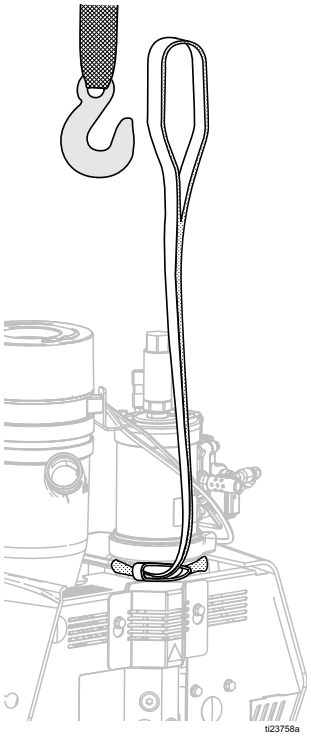


**FIG. 7: Lifting Strap**

2. Place the base system in the desired operating location and orientation. See **Location**, page 18.

- The bottom of the electrical enclosure has holes for securing the InvisiPac system to a surface. The holes are accessible through the bottom access doors in the three rear walls of the electrical enclosure.
- *To install the InvisiPac system in place of a non-Graco hot melt system,* purchase **Adapter Plate, 24R083**. See installation instructions on page 114.
- *To raise the system to eye-level,* purchase **System Stand, 24R088**. See installation instructions on page 114.

**NOTE:** Supplied vacuum transfer hose must reach from the system to the adhesive pellets container. Supplied heated hose must reach from system to applicator(s).

3. Adjust the funnel inlet:

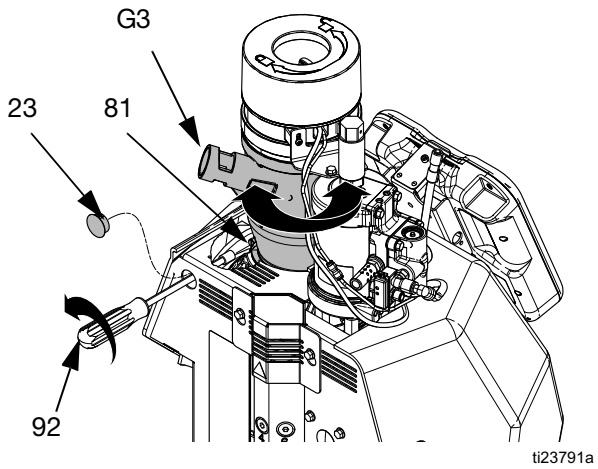


a. Remove plug (23) and insert the provided 5/16 in. nut driver (92) through the access hole in the back of the system. Loosen the band clamp (81) two turns.

b. Rotate the funnel inlet (G3) and re-tighten the band clamp (81).

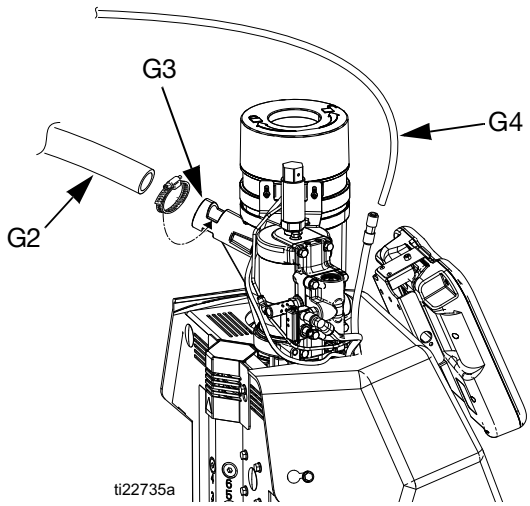


**FIG. 8**

4. Insert 1.3 in. (33 mm) OD clear vacuum transfer hose (G2) into vacuum transfer funnel (G3) inlet and secure with supplied hose clamp. The hose clamp should be placed over the cutouts in the funnel inlet where it can firmly hold the transfer hose. See FIG. 8.

5. Connect the long supplied 3/8 in. OD air line (G4) to the 3/8 in. push-to-connect fitting on the air line from the system. See FIG. 8.

**NOTE:** When routing the vacuum transfer hose, ensure there are no tight coils, turns, or dips in the vacuum hose. These will inhibit optimal functioning of the vacuum transfer system.

**NOTE:** Maximum vacuum hose length is 30 ft (9.1 m). Use horizontal hose routing as much as possible. The vacuum hose must not rise more than 10 ft (3.0 m), measured from the vacuum inlet. Any vertical rise will lower the maximum flow rate of the vacuum transfer system.

6. Install heated hoses, see FIG. 9:

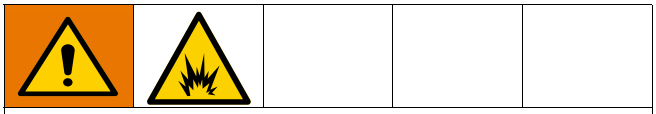

To reduce the risk of fire and explosion, only use Graco heated hoses with the InvisiPac system. Use of non-Graco hoses will void agency approvals.

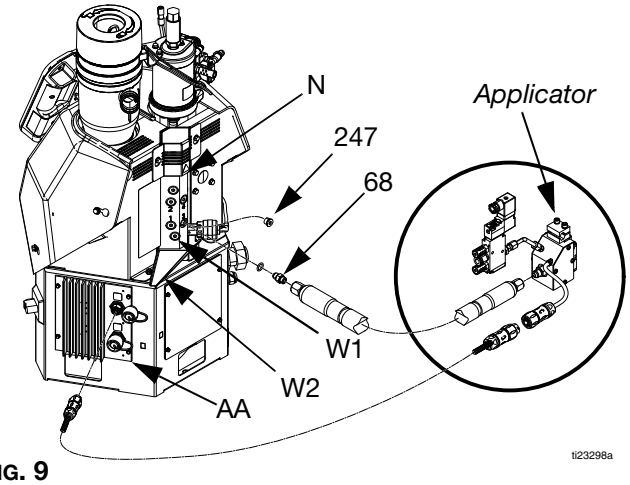


**FIG. 9**

a. Place a rag on the drain tray (W2) attached to the melter. Residual oil may be in the system from the factory. See FIG. 9.

b. Use a 1/4 in. allen wrench to remove the drain port plug (W1). See FIG. 9.

A 1/4 in. allen wrench is shipped loose with the system.

c. When fluid stops draining, re-install drain port plug (W1) then remove rag. See FIG. 9.

d. Remove plug (247) from the lowest numbered outlet on the melter. Do not use the drain plug (W1). See FIG. 9.

In the following step, the o-ring side of the hydraulic fitting (68) faces the system. See FIG. 9.

e. Install the supplied hydraulic fitting (68) with an o-ring into the open port and tighten with an 11/16 in. wrench or socket.

f. Install hose onto hydraulic fitting (68) with male electrical connector side toward the system. Use 11/16 in. wrench to tighten hose onto hydraulic fitting (68).

g. Locate MZLP (AA) connector marked with same number as the hose fluid outlet port. Remove that connector cover then install connector from heated hose. See FIG. 9.

h. Repeat the procedure for the remaining channels. Use the bottom melter ports first to ease installation.

i. Install cap on any unused MZLP electrical connectors.

Fluid outlet port 1 must be used and electrical connector from that hose must be connected to MZLP connector 1. The system will not operate unless a hose is connected to MZLP connector 1. If a hose is not connected to connector 1, “Invalid Sensor - hose/gun” faults will result. If the melter must be run without a hose/applicator electrically attached to MZLP connector, use **Overtemperature Jumper, 16Y727**, page 124.

7. Install applicator(s), see FIG. 9:

Use of a Graco applicator is not required with this system. However, all applicators attached to the system must be rated for 1200 psi (8.3 MPa, 83 bar), 400°F (204°C), have an RTD type sensor, and use no more than 400W at 240 VAC.

a. Connect heated hose fluid outlet to applicator fluid inlet. Use 11/16 in. wrench to tighten. See FIG. 9.

b. *For Graco applicators,* attach applicator electrical connector to heated hose electrical connector. See FIG. 9.

c. *For non-Graco applicators,* attach applicator electrical connector to adapter harness 16T916, 16T917, or 16Y828 then attach adapter harness connector to heated hose connector. See **Non-Graco Applicator Adapter Cables** on page 112 to determine which adapter cable to use with your applicator.

d. Repeat for any additional applicators.

8. *If necessary,* set up the pattern controller (not included) to control opening and closing of the applicator. See pattern controller manual.

The system controls applicator heating only. A separate pattern controller must be set up to open and close the applicator.

9. Install the supplied air inlet bleeding ball valve and air filter kit (Graco Part No. 24R707) at the 1/4 NPT female system air inlet (J). See FIG. 10.

Elbows and riser tube provided with inlet air kit are optional and may be used as desired.

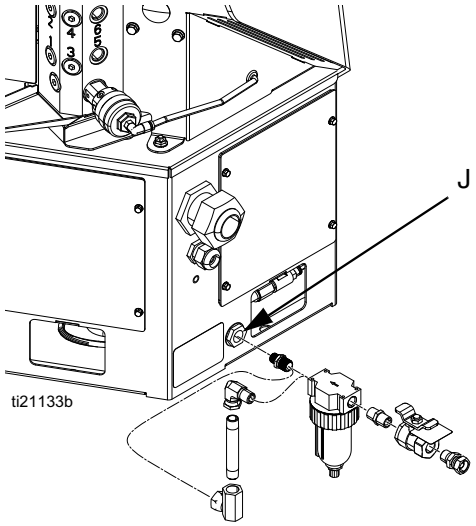


**FIG. 10**

The system must have a bleed-type ball valve that bleeds pressure downstream when closed. Otherwise, the supplied air will need to be disconnected from the system whenever the pressure is relieved.

The system must use an air filter with a minimum flow rate of 30 scfm.

10. *If using the same air for the applicator(s),* make sure to install the tee in the air line before the ball valve. There should not be anything between the ball valve and the system. See *applicator* manual for *applicator* air pressure requirements, and use a regulator before the gun to decrease the air pressure, if necessary.

11. Close the ball valve.

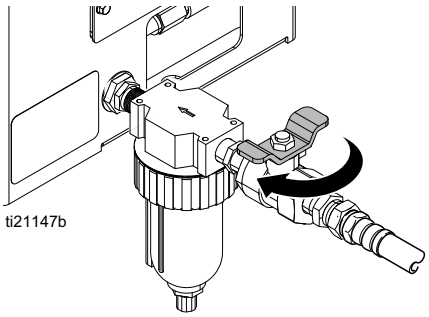


**FIG. 11**

12. Attach a 3/8 in. minimum air supply line to air filter. See FIG. 11.

**NOTE:** Air supply pressure must be between 80 psi (550 kPa, 5.5 bar) and 100 psi (690 kPa, 6.9 bar). Recommended pressure is 100 psi (690 kPa, 6.9 bar). If air pressure is expected to drop below 80 psi (0.5 MPa, 5 bar), there is an air reservoir kit that allows the system to operate down to 60 psi (0.4 MPa, 4 bar). See **Air Reservoir Kit, 16W366**, on page 116.

13. *To lock access to the air pressure adjustments,* purchase **Air Adjustment Lock, 24R084**. See installation instructions on page 113.

14. *To install a light tower that illuminates red when a system error occurs,* purchase **Light Tower Kit, 24R226**. See installation instructions on page 115.

15. *To upgrade a 2 channel system to a 4 channel system,* purchase **4 Channel Upgrade Kit, 24V528**. See installation instructions on page 117.

16. *To upgrade a 4 channel system to a 6 channel system,* purchase **6 Channel Upgrade Kit, 24V529**. See installation instructions on page 120.

17. Install MZLP electrical connector caps on all unused channels.

# Recommended Air Setup

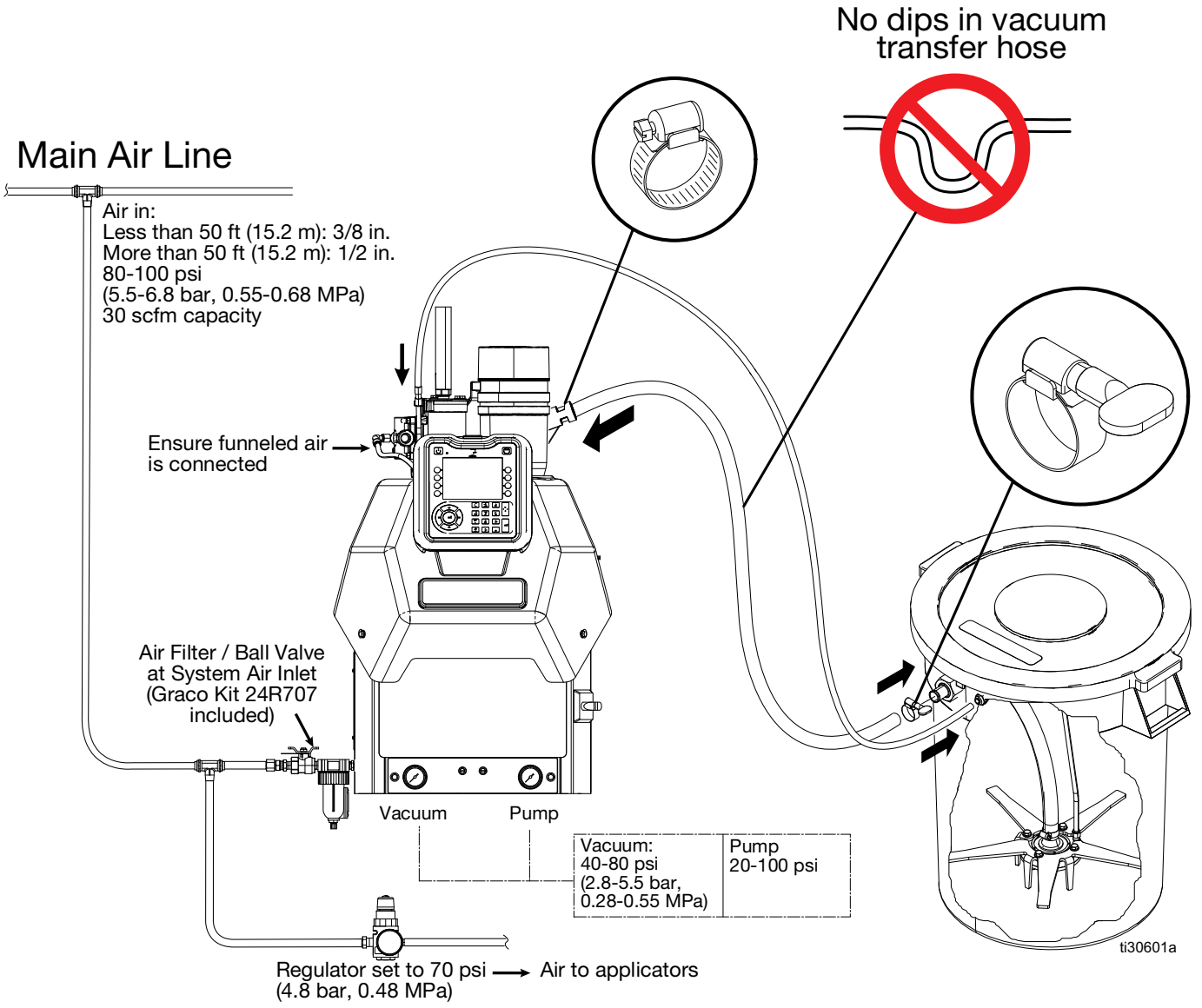


**FIG. 12**

If plant air pressure is >90 psi, add air regulator kit to the 24H420 to the air supplying the hopper shaker. Regulate the shaker air according to the vacuum feed pressure according to the table below.

Using vacuum feed air pressure higher than necessary may cause the melter to over fill and interrupt production.

| Vacuum Feed air pressure | Max air pressure to hopper |
|---|---|
| 40 psi (2.8 bar) | 60 psi (4.1 bar) |
| 50 psi (6.4 bar) | 75 psi (5.2 bar) |
| 60 psi (4.1 bar) | 90 psi (6.2 bar) |
| 70 psi (4.8 bar) | 105 psi (7.2 bar) |
| 80 psi (5.5 bar) | 120 psi (8.3 bar) |

# Connect Electrical Cord

**NOTE:** See **Grounding** section on page 18.

Improper wiring may cause electric shock or other serious injury if work is not performed properly. Have a qualified electrician perform any electrical work. Be sure your installation complies with all National, State and Local safety and fire codes.

To reduce the risk of electric shock, perform the entire **Attach Components** procedure beginning on page 18 prior to connecting electrical cord.

The installed strain relief bushing (106) fits a 0.708-1.260 in. (18-32 mm) OD electrical cord. See FIG. 13. If needed, use a wrench to tighten the strain relief bushing until it is snug on the cable.

Tubing 17F777 and 17F779 is included for smaller diameter electrical cord. Place around the power cord and secure in the strain relief brushing (106).

The accessory strain relief bushing kit 24X190 is available for smaller (0.512-1.024 in, 13-26 mm) OD electrical cords. See **Accessories**, page 110.

For **208V Electrical Circuits**, see page 24.

1. Turn main power switch OFF.
2. Disconnect cable from ADM, push cable through plastic shroud, then remove plastic shroud from system.
3. Remove electrical enclosure access door (T). See FIG. 2 on page 14.
4. Insert electrical cord through electrical enclosure strain relief bushing (106). See FIG. 13.
   a. Alternate electrical cord routing: using conduit, run electrical cord from access port (X) through hole (Y). Conduit is required when routing wires near compressed air components.
5. Attach insulated ferrules to the end of each wire.

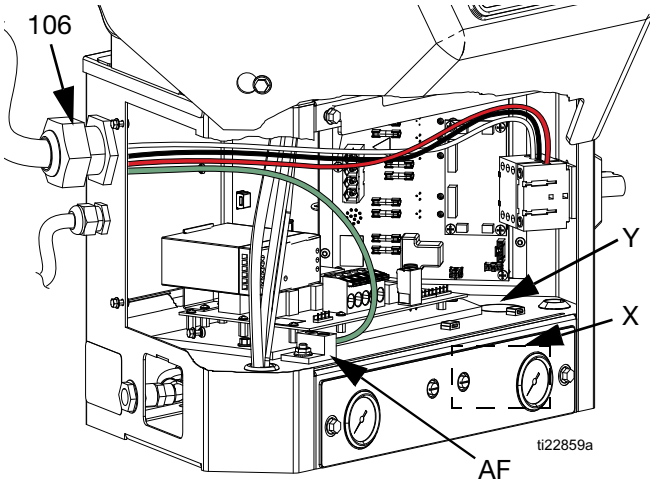


**FIG. 13**

6. Connect ground wire to chassis ground (AF). See FIG. 13.
7. Connect power wires as shown in FIG. 14. Not all models use all 4 wires.

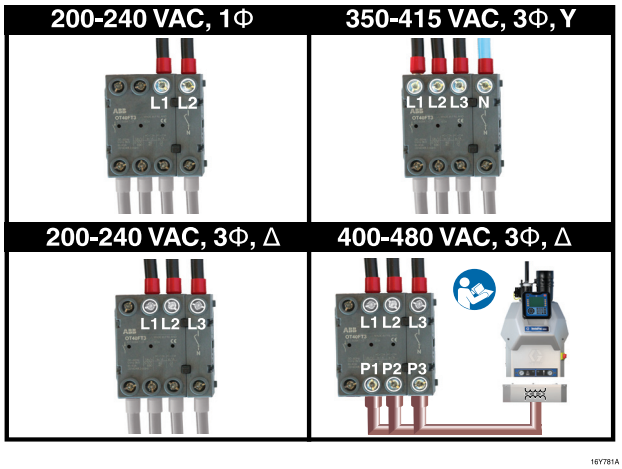


**FIG. 14**

8. Use zip ties to secure the electrical cord to the tie-downs located on the top of the inside of the electrical enclosure.
9. Tighten screw-terminals to at least 10 in-lb (1.1 N•m).
10. Install electrical enclosure door.
11. Perform **Select ADM Settings** on page 24 prior to turning on heat.

# 208V Electrical Circuits

For 208V electrical supply, a qualified electrician can install a 208V to 240V step-up transformer to improve startup times.

## Transformer Sizing

Minimum transformer rating can be calculated by taking transformer output voltage times the ADM breaker setting.

Single Phase, 20A ADM Breaker Setting Example:
*240 volts x 20 amps = 4800 watts*

Three Phase, 20A ADM Breaker Setting Example:
*240 volts x 20 amps x SQRT(3) = 8315 watts*

# Select ADM Settings

**NOTE:** See **Appendix A - ADM** on page 126 for detailed ADM information, including general operation.

1. Turn main power switch ON .

2. When the ADM is finished starting up, press  to switch from the Operation screens to the Setup screens. Use , , , and  to navigate between screens.

3. On the System 2 screen:

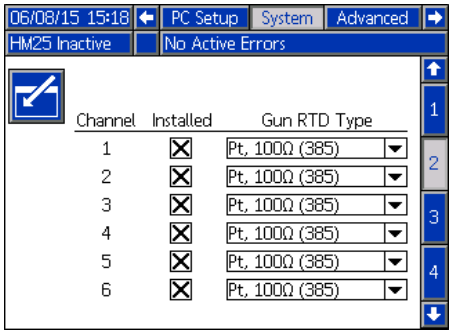


   a. Check the box in the “Installed” column for each channel that has a heated hose and applicator installed.

   b. Select the RTD type used on each installed applicator. See applicator manual.

An incorrect RTD setting will cause the system to be incapable of maintaining the temperature setting.

The supported RTD types are Ni, 100 ohm; Ni, 120 ohm; NiFe, 604 ohm; Pt, 100 ohm (385), Pt, 100 ohm (392); and Pt, 1000 ohm. An “Auto” selection is available but should only be used when the specific RTD type cannot be identified. Using the “Auto” RTD setting may result in inaccurate temperatures.

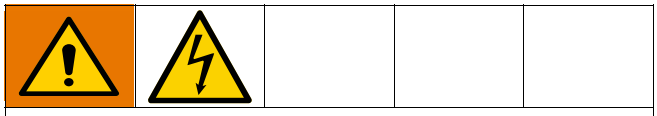

To prevent fire and explosion, a qualified electrician must determine the proper circuit breaker size to use for the power supplied to the system.

4. On the System 3 screen:

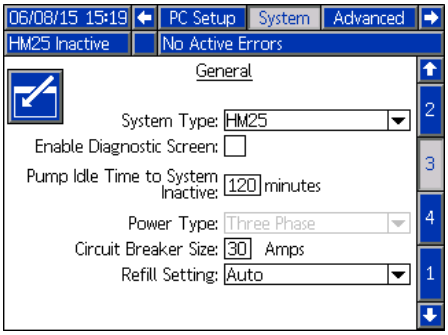


   a. Enter the main circuit breaker size used. This is the circuit breaker installed external to the system for the system power supply.

The InvisiPac system limits the amount of power it pulls based on the input circuit breaker size. This impacts the startup times because it affects the heating energy used to warm up the materials.

5. On the Advanced 1 screen, set the system date and time.

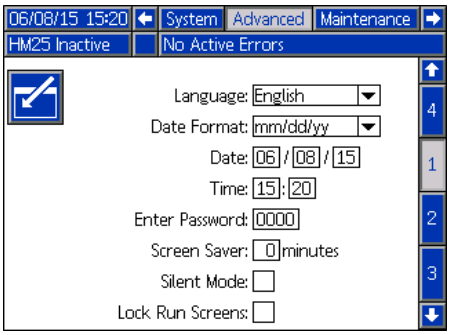

6. On the Advanced 2 screen, set the temperature and mass units.

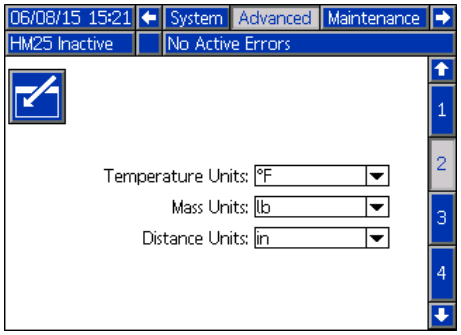


7. To setup the optional Schedule function, see **Schedule** on page 37.

**NOTE:** The Schedule function enables the system to automatically enable and disable heating at specified times so that the system is already up to temperature when a shift begins.

8. *If desired,* set any remaining settings in the Setup screens before going on to the next steps that use the Operation screens. These are not required for system operation but include useful functions. See **Appendix A - ADM**, beginning on page 126, for detailed information about each setup item.

9. Press  to switch from the Setup screens to the Operation screens. Use , and  to navigate between screens.

10. On the Targets screen, use  and , shown next to , to adjust system melter setting. Also, the desired temperature setting can be typed in using the numeric keypad.

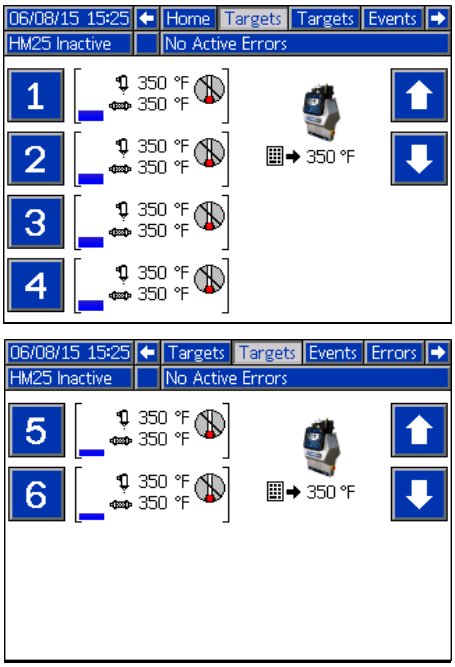

11. On the Targets screen, adjust heated hose and applicator temperature settings:

InvisiPac is a high powered tank-free system that delivers heat faster than traditional tank systems. Tanks are often run at a lower temperature than the application temperature to avoid excessive adhesive degradation since a large volume of adhesive sits at temperature.

a. Press 1 to select the channel.

b. Use ↓ and ↑, shown next to , to adjust applicator temperature setting 350 °F to the desired setting for that channel.

If a higher applicator temperature is desired, adjust all zones to the higher temperature or adjust only the applicator in small increments.

**NOTE:** Alternatively, use the physical up and down arrow push-buttons on the ADM keypad until ⌨➔ is next to the temperature setting to change then use the numeric keypad to enter the desired temperature.

c. Use ↓ and ↑, shown next to , 350 °F to adjust heated hose temperature setting to the desired setting for that channel.

**NOTE:** Alternatively, use the physical up and down arrow push-buttons on the ADM keypad until ⌨➔ is next to the temperature setting to change then use the numeric keypad to enter the desired temperature.

***NOTICE***

Set melter, hose, and gun to the same setpoint temperature for best performance. Do not set the hose temperature higher than the melter. Running the hose at a setpoint higher than the melter is unnecessary in this tank-free system and could lead to adhesive degradation in the hose. Short adhesive residence time in the melter eliminates the need to set the melter at a lower setpoint than other zones.See **Operation Tips to Minimize Charring**, page 40.

# Applicators

Applicator heating is controlled by the InvisiPac system. A pattern controller is required to control the opening and closing of applicators. If using an InvisiPac Pattern Controller, refer to manual 334784 - InvisiPac Pattern Controller for details on wiring and setup.

# PLC Connection

A PLC can control and monitor all items shown in the dropdown menus on the System 1 screen in the Setup screens.

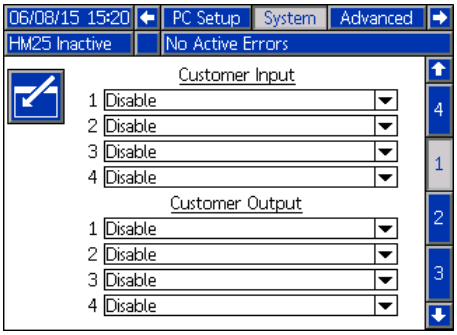


### Customer Input Dropdown Options

| Option | Description |
|---|---|
| Disable | Not used. |
| Heater On/Off | Turn on or off the heating system and pump. |
| Channel 1, 2, 3, 4, 5, or 6 Enable/Disable | Enable or disable hose and applicator heating for that individual channel. |

### Customer Output Dropdown Options

| Option | Description |
|---|---|
| Disable | Not used. |
| System Ready | Indicates when the system is up to temperature and the pump is stalled at pressure. |
| Error (Alarm) | Indicates when there is an active alarm. An active alarm will disable the heating system and pump. |
| Error (Deviation/Advisory) | Indicates when there is an active deviation or advisory. An active deviation or advisory will NOT disable the heating system and pump. |
| Maintenance Due | Indicates when the maintenance total has reached the preset notification value. |

All outputs are normally open when power is OFF. For Error (Alarm) output, the contacts open when an alarm occurs. For all others, contacts close.

The InvisiPac system ships with two screw-terminal connectors that plug into MZLP connectors H1 and H2. Connectors are located in a bag on the inside of the electrical enclosure front access door. To replace the connectors, order kit 24P176.

1. On the System 1 screen (in the Setup screens) select the function of each input on MZLP connector H1 and each output on MZLP connector H2.
2. Turn main power switch OFF.
3. Remove electrical enclosure front access door.
4. Route I/O cable through strain relief in electrical enclosure. See Customer I/O Cable (S) in FIG. 1 on page 13.
5. Remove power from PLC.
6. Connect the PLC to connectors H1 and H2.

Each connector has four signals. The MZLP board specifies the input range for each signal. See the following table for pin assignments.

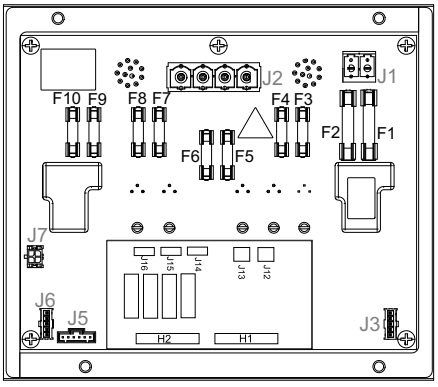


**FIG. 15: MZLP Board**

| H1 - Customer Input | | H2 - Customer Output | |
|---|---|---|---|
| **Signal** | **Pin** | **Signal** | **Pin** |
| 1 | 1, 2 | 1 | 1, 2 |
| 2 | 3, 4 | 2 | 3, 4 |
| 3 | 5, 6 | 3 | 5, 6 |
| 4 | 7, 8 | 4 | 7, 8 |

**Inputs:** High: 10-30 Vdc, Low: 0-5 Vdc. Inputs function without concern for polarity. Applying “high” voltage will turn the heaters on and enable channels. Removing voltage will turn the heaters off and disable channels.

**Outputs:** 0-250 Vac, 0-30 Vdc, 2A Maximum.

## PLC Connection Block Diagrams

The following block diagrams show how to connect customer inputs and outputs to the InvisiPac MZLP. For convenience, each InvisiPac ships with connector kit 24P176. If a connector is lost or damaged, order kit 24P176 for replacements.

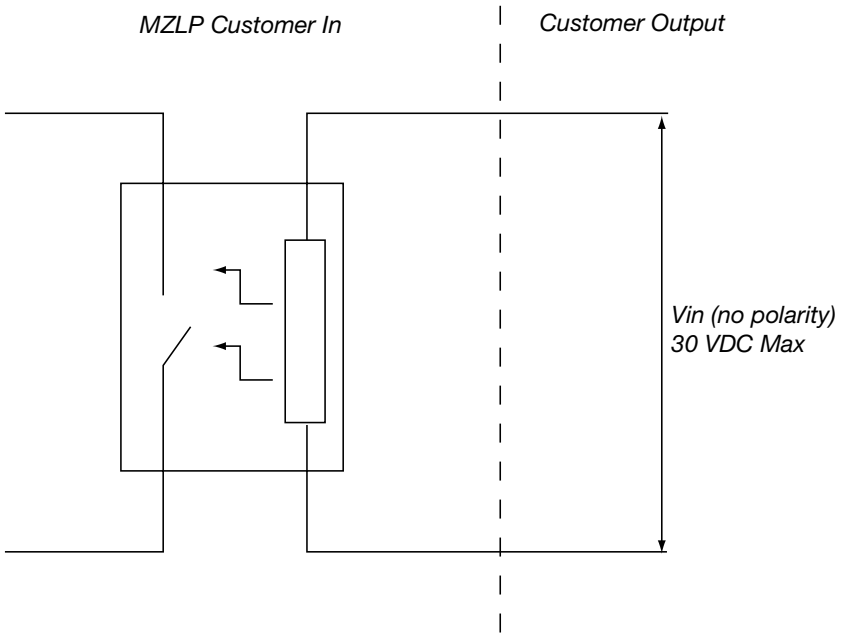


**FIG. 16: Customer Input**

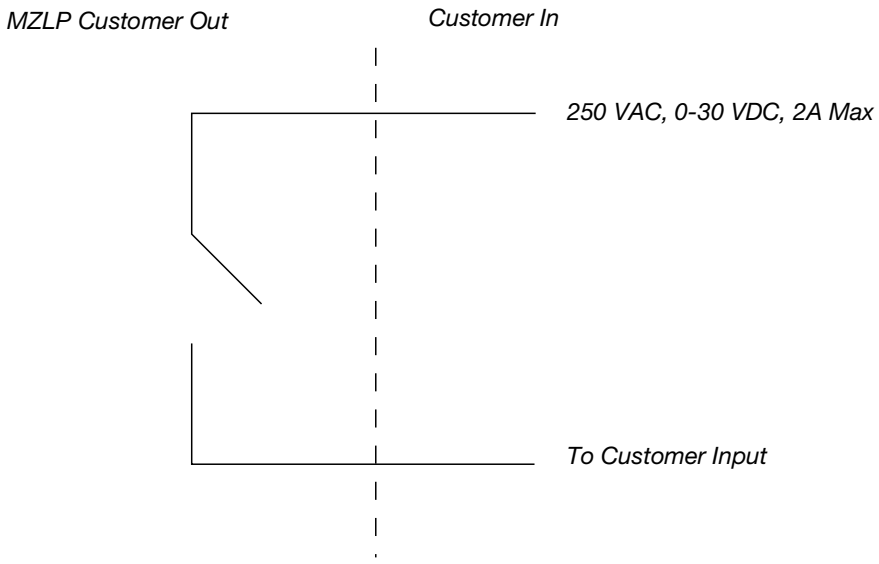


**FIG. 17: Customer Output**

# Material Tracking

The material tracking function allows the user to track product counts and material usage for long term data collection.

## Viewing the Log

In order to view the log, navigate to the Home screen and press the material log softkey  (see below).

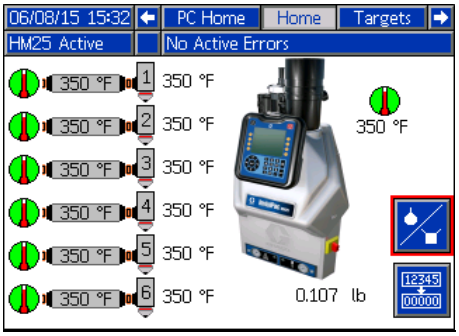


Once inside the log (see below), use the up/down arrow keys to view previous data. The log stores up to 200 rows of date including the following:

| Item | Icon |
|---|---|
| Date | N/A |
| Cycles | N/A |
| Material Used | lb |
| Program | |
| Products | # 1 |
| Material per Product | g / |

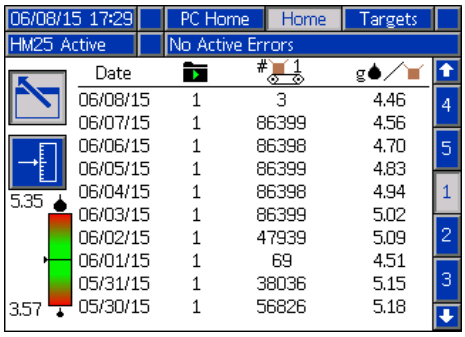


Different system Types will have different data show in the material log. The chart below outlines what data is shown for each system type.

| System Type | Date | Cycles | lb | | # 1 | g / |
|---|---|---|---|---|---|---|
| InvisiPac | X | X | X | | | |
| InvisiPac w/ ADM Unit Counter | X | | | | X | X |
| InvisiPac w/ Pattern Controller | X | | | X | X | X* |

*See Material Tracking Coverage for Pattern Controller Systems.

To exit the log, press the screen exit softkey .

## Material Tracking Coverage for Pattern Controller Systems

| Line Configuration | Diagram | Material Used (lb) | Products per Line (# 1) | Material per Product (g/) |
|---|---|---|---|---|
| Single Line | 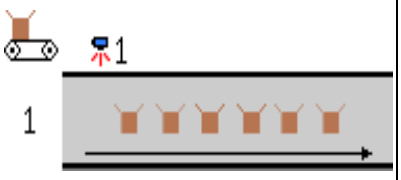  | X | X | X |
| Multi-Unit Line | 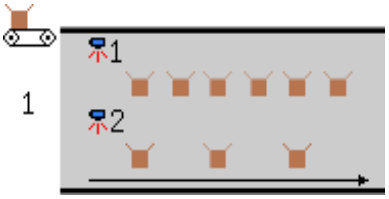  | X | X | X* |
| Multi-Line | 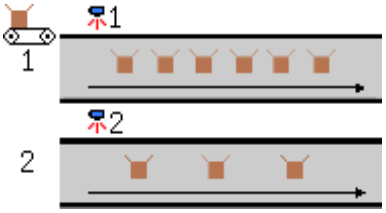  | X | X | ** |

* Products on both parts of the line must be the same in order to generate accurate material per product data.

** Accurate material per product data cannot be generated for multi-line configurations (assumes different products).

# Calibration



Perform the following steps to calibrate the material tracking function:

1. Navigate to the Material Tracking Screen (Screen 4 of the System chapter).
2. To calibrate using the ***tape and scrape*** method:
   a. Obtain a scale.
   b. Place tape on a product(s) in locations where material is dispensed.
   c. Run normal production (un-taped products) until a value appears in the grams per product label (this could take several minutes of production).
   d. Run taped product(s) through line and allow material to cool and harden on the tape.
   e. Scrape all material from product and place on scale.
   f. Adjust the specific gravity setting until the grams per product displayed matches the value measured by the scale using the following formula:

*New SG Value = Current SG Value x Measured Grams per Product / Displayed Grams per Product*

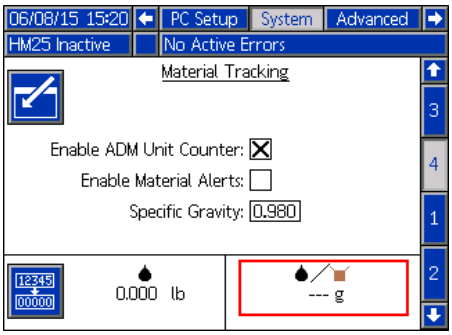


3. To calibrate using the ***purge*** method:
   a. Obtain a scale and a container.
   b. Reset the calibration weight totalizer by pressing and holding the reset softkey .
   c. Tare scale with empty container and purge at least 1 lb. of material into the container.
   d. Weigh container with material.
   e. Adjust the specific gravity setting until the weight displayed in the totalizer matches the value measured by the scale using the following formula:

*New SG Value = Current SG Value x Measured Weight / Displayed Weight*

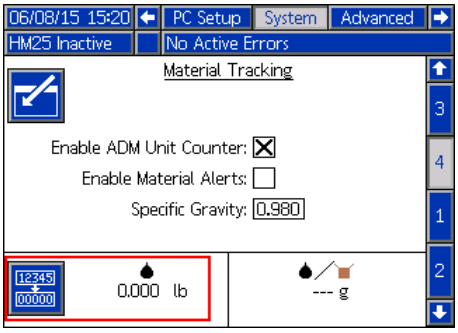

## Material Alerts

This feature can be used to monitor material usage based on a target material per unit value. If material alerts are enabled the system will record an event every time the system deviates over 20% from the target. The material alert information can be seen in the bottom left corner of the material log (see image below).

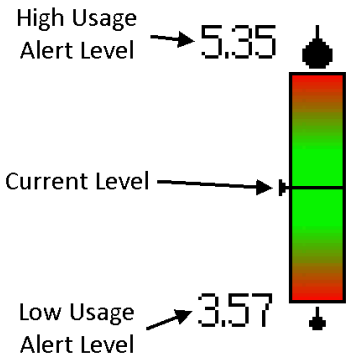


## Enable/Disable material Alerts

To enable/disable material alerts, select/deselect the *Enable Material Alerts* setting on the Material Tracking Screen (Screen 4 of the System chapter).

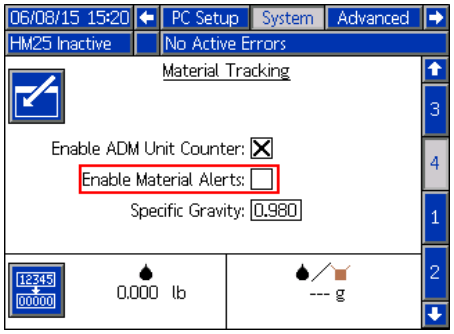


## Reset Material Target

To reset the material target value, press the reset material target softkey . An hourglass will appear indicating that the system is learning the new target (current machine output).

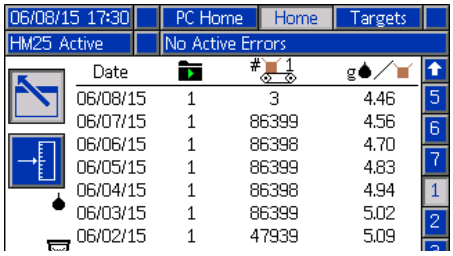

# Operation



Heating and dispensing hot melt adhesive may create potentially harmful vapors. Read material manufacturer's warnings and material MSDS to know specific hazards and precautions. Ventilation of the work area may be required.

See **Appendix A - ADM** on page 126 for detailed ADM information.

**NOTICE**

To prevent damage to soft key buttons, do not press the buttons with sharp objects such as pens, plastic cards, or fingernails.

See **Appendix B - USB Downloading, Uploading** on page 133 for detailed USB information.

## Overview

The system includes a vacuum transfer system that pulls the adhesive pellets into the system as needed. Once melted, the adhesive enters the pump where it is pumped into the heated hoses then to the heated applicators. The applicator then briefly opens to dispense the desired quantity of adhesive.

Even though the system rises to operating temperature quickly, there is a Schedule function in the ADM that eliminates waiting for the system to heat up. The Schedule function automatically enables the heating system at the user-specified times so the system is ready to dispense when a shift begins. The Schedule function also disables the heating system at user-specified times to ensure the heating system is disabled when not being used.

## Initial Startup and Prime



All setup procedures must be completed prior to initial startup. See **Setup** on page 18.

**NOTE:** PSA-type adhesive pellets will not work in the InvisiPac system.

1. Direct the applicator into an appropriate waste container.
2. Fill adhesive pellets container with hot melt adhesive pellets.
3. Turn main power switch ON .
4. Open system air inlet ball valve.

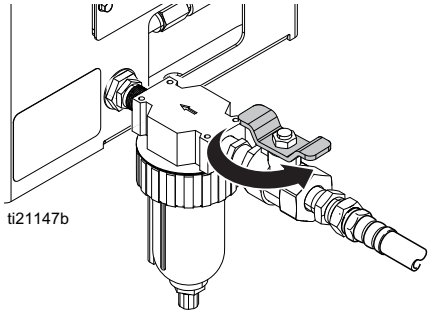

5. Use pump air pressure regulator (C) to adjust pump air pressure to 0.

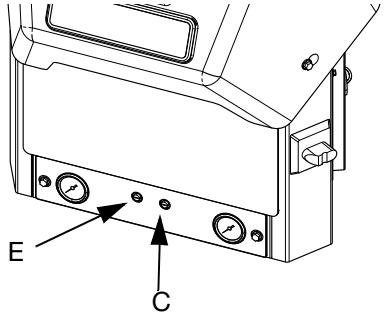


**FIG. 18**

6. Use vacuum transfer air pressure regulator (E) to adjust vacuum transfer air pressure setting to 40-100 psi (280-690 kPa, 2.8-6.9 bar). Recommended setting is 60 psi (414 kPa, 4.1 bar). See FIG. 18.

Vacuum transfer will not begin operating until pump reaches operating temperature.




To prevent fire and explosion, never exceed the cleaning fluid's rated temperature. If the system was just flushed, residual cleaning fluid is still in the system until the system is primed with adhesive. Do not raise temperature above cleaning fluid rated temperature until system is primed with adhesive.

A new system may have residual oil due to testing at the factory prior to shipping. To prevent smoking, make sure to perform the following step.

7. *On new systems only:* temporarily adjust the melter temperature to 250°F (121°C). See **Select ADM Settings** on page 24 for instructions.

8. Press  to enable the heaters and pump.

When system is up to temperature, the pump will be activated automatically, but will not start because there is no air pressure supplied to the pump.

When the melter is up to temperature, the auto-fill function will initiate to fill the funnel with pellets.

9. *On new systems only:* After the melter has reached 250°F (121°C) and the funnel is filled with pellets, set the melter temperature back to the desired operating temperature. See **Select ADM Settings** on page 24 for instructions.

10. Use separate pattern controller to open the applicators and keep them open.

**NOTICE**

In the following step, to prevent damage to the pump due to pump cavitation, do not supply more than 20 psi (140 kPa, 1.4 bar) air pressure to the pump until the system is fully primed.

11. With the applicators open and the system up to temperature, slowly increase pump air pressure until the pump begins to run very slowly. Approximately 20 psi (140 kPa, 1.4 bar) should be sufficient.

Operation may be erratic below 20 psi (140 kPa, 1.4 bar).

12. Continue running the pump until clean, air-free material is dispensed from each applicator.

13. When each applicator is fully primed, adjust pump to desired pressure setting:

    a. Adjust pump pressure to between 20-100 psi (140-690 kPa, 1.4-6.9 bar).

    b. Use separate pattern controller to repeatedly open and close each applicator while inspecting the dispense pattern.

    c. Repeat until desired dispense pattern is

# Manual Refill

Use Automatic Refill whenever possible. The system uses Automatic Refill by default and must be manually changed to Manual Refill. Only use Manual Refill if the Automatic Refill system is not functioning properly and cannot be fixed in a timely manner. Perform service to automatic feed system as soon as possible to limit debris buildup on feed funnel.

It is recommended to maintain a minimum flow rate of 1.5 lb/hour to prevent material from melting within the feed cap and funnel. If production rate is below 1.5 lb/hour or system sits at temperature without dispensing for extended periods of time, use manual refilling with caution. System flow rate can be monitored by enabling the Diagnostic screen.

1. On the System 3 screen (in the Setup screens), select “Manual” from the Refill mode dropdown.
2. Remove the two bolts from the funnel bracket, then remove the top portion of the funnel.

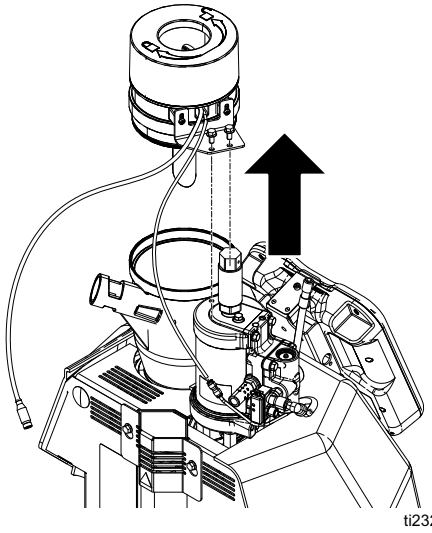


**FIG. 19**

3. Disconnect the sensor cable and sensor cooling air.
4. Fill the funnel with adhesive pellets.

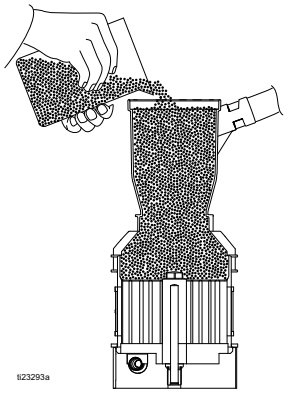


**FIG. 20**

5. Refill the funnel as needed to maintain the required dispense rate.
6. When finished dispensing for the day, dispense into a waste container until the material level is down to the melter core. See FIG. 21.

This will lower the adhesive level within the funnel cap to the correct level to prevent any issues upon startup the following production day.

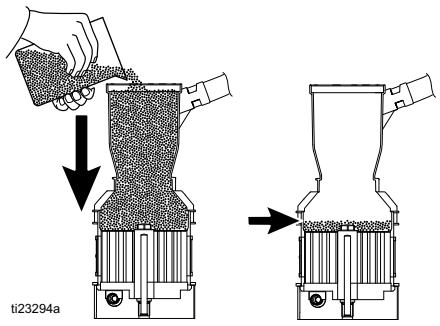


**FIG. 21**

## Automatic Refill

The system uses automatic refill by default. If the automatic refill system is malfunctioning and cannot immediately be fixed, Manual Refill can be used.

To use automatic refill:

1. On the System 3 screen (in the Setup screens), select “Automatic” from the Refill mode dropdown.
2. Verify shaker and tube are connected to the system. See **Attach Components** on page 18.
3. Verify shaker inlet (K) is at the bottom of the adhesive pellets container that is filled with hot melt adhesive pellets. See FIG. 1 on page 13.

The shaker inlet must be completely covered in adhesive pellets in order for it to effectively pull pellets into the tube.

4. *If not already set,* use vacuum transfer air pressure regulator (E) to adjust vacuum transfer air pressure setting to 40-100 psi (280-690 kPa, 2.8-6.9 bar). Recommended setting is 60 psi (414 kPa, 4.1 bar).

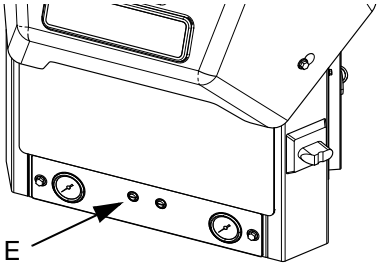


**FIG. 22**

The system will automatically transfer the pellets to the system as necessary.

## Dispense



Only hot melt adhesive pellets can be used in the InvisiPac system.

1. *If the system is empty or has air in the lines,* perform **Initial Startup and Prime** procedure on page 33.
2. If main power switch is OFF, turn main power switch ON .

The main power switch should be left ON at all times when using the Schedule function.

3. Prepare for dispensing:
   a. Verify air inlet ball valve (J) is open. See FIG. 1 on page 13.
   b. Check pressure gauges (D, F) to verify vacuum transfer and pump air pressures are set as desired. See FIG. 1 on page 13.
   c. *If using Automatic Refill,* see **Automatic Refill** on page 36.
   d. *If using Manual Refill,* see **Manual Refill** on page 35.
   e. Verify applicators are closed.
4. Press  to enable the heaters and pump.

If using the Schedule function, the heaters and pump will be enabled automatically at the set time. You will not need to press  if using the Schedule function unless you wish to enable the heating system before the set time.

When system is up to temperature, the pump will begin running automatically. It will stall at pressure unless an applicator is open. Material will be dispensed whenever an applicator is open after the system is up to temperature.

5. *When the system is up to temperature,* use separate pattern controller to open and close the applicators as desired to dispense material.

While operating the system, the actual temperatures of the hose, applicator, and system melter are displayed on the Home screen.

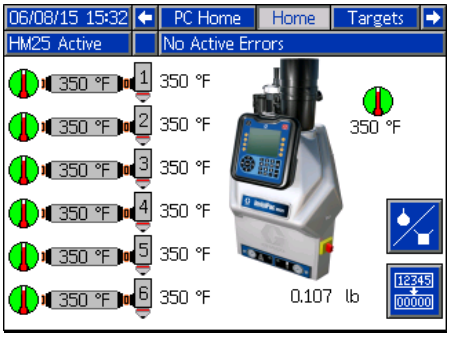


# Shutdown

Press  to disable the heaters and pump. The screen will say “Inactive”. If using the Schedule function, the heaters and pump will be disabled automatically at the set time. You will not need to press  if using the Schedule function unless you wish to disable the heating system before the set time. If the heaters were manually disabled, the Schedule function will automatically enable them at the next set time.

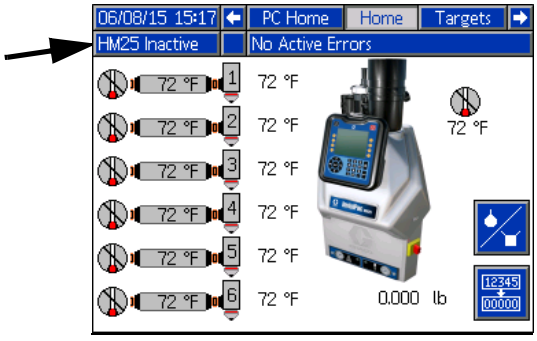


Do not turn the main power switch OFF if using the Schedule function.

# Schedule

The Schedule function allows the user to specify times when the system will automatically turn ON and OFF the heaters and pump.

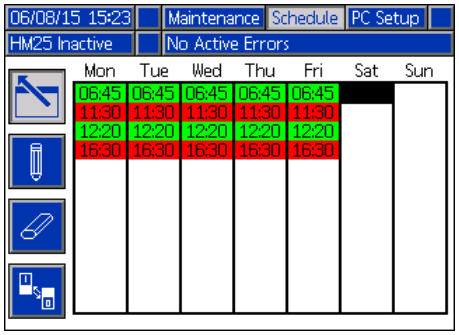


### Set Schedule Times

Times are set using a 24-hour clock. Several on and off times can be set each day.

1. On the Schedule screen (in the Setup screens), set the ON times for each day of the week.

2. Set the OFF times for each day of the week.

### Enable Schedule Function

The Schedule function is automatically enabled when values are entered in the Schedule screen. To disable a scheduled event, navigate to the event and press  The event will appear gray on the screen when it is disabled. To re-enable an event, navigate to the event and press . The event will appear red (system off) or green (system on). If no events are needed, turn the main power switch OFF to prevent system from automatically enabling and disabling the heaters.

### How to Use the Schedule Function

At the end of the work day leave main power switch ON . The Schedule function will automatically enable and disable the heaters and pump at the specified times.

# Pressure Relief Procedure

Follow the Pressure Relief Procedure whenever you see this symbol.

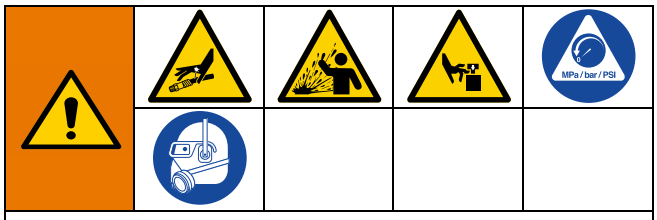

This equipment stays pressurized until pressure is manually relieved. To help prevent serious injury from pressurized fluid, such as skin injection, splashing fluid and moving parts, follow the Pressure Relief Procedure when you stop spraying and before cleaning, checking, or servicing the equipment..

1. Turn main power switch OFF .
2. Close the inlet air supply ball valve.

Manually verify the pressure is relieved by opening the applicator and ensuring no adhesive is dispensed.

# Drain the System



The system must be drained prior to flushing and prior to some maintenance and repair procedures.

1. On the System 3 screen (in the Setup screens), change the Refill Setting to “Manual”.

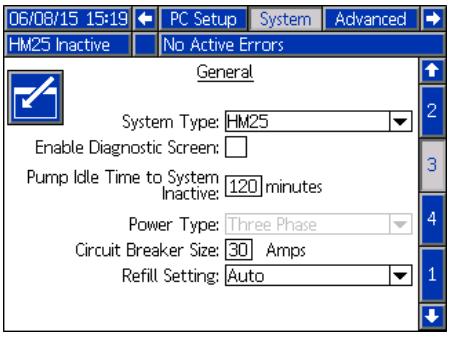


2. *If the heating system is disabled,* press  to enable the heaters and pump.
3. Decrease pump air pressure to 0.
4. Close system air inlet ball valve.
5. Disconnect hose from applicator inlet then place hose outlet in a waste container. Repeat for all hoses. Keep hose to applicator electrical connector connected.
6. Open applicator to allow residual fluid in applicator to drain.
7. When system is at operating temperature, slowly increase pump air pressure until fluid begins flowing into the waste container.

It may take several minutes to empty the system. When there is no melter fluid at the pump, the pump will begin to cycle faster.

8. When the pump begins to cycle faster, close the system air inlet ball valve.
9. Press  to disable the heaters and pump.
10. Remove melter drain plug (W1). See FIG. 2 on page 14.
11. Disconnect hose from melter outlet.
12. Wait until system stops draining or at most 10 minutes.

There will be some residual adhesive in the system.

13. When done performing the procedure that required draining the system, set Refill Setting back to “Auto” on the System 3 screen.

# Flush

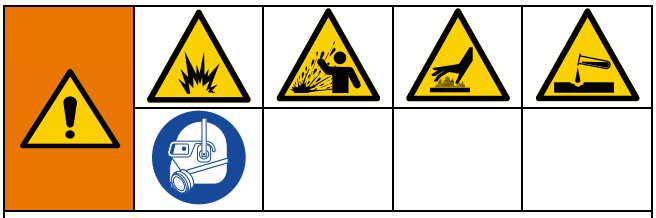

To prevent fire and explosion, use the adhesive manufacturer's recommended cleaning fluid.

- Never exceed the cleaning fluid's rated temperature
- Never flush your system or clean any aluminum components with halogenated hydrocarbon cleaning solutions.

To prevent severe burns, wear protective clothing.

This procedure describes how to flush one hose at a time for maximum effectiveness.

See the hot melt adhesive technical data sheet or MSDS for the recommended cleaning fluid. Contact the hot melt supplier if the technical data sheet or MSDS is not available.

1. Perform **Drain the System** on page 38.
2. *If the heating system is enabled,* press  to disable the heaters and pump.
3. Loosen upper hose clamp securing funnel assembly to air motor bracket then remove funnel assembly from system. Keep 1.3 in. (33 mm) clear tube and funnel cap attached to funnel.
4. Loosen clamp then remove plastic melter cap. Keep fill sensor attached to cap.
5. On the System 3 screen (in the Setup screens), verify the Refill Setting is set to "Manual".

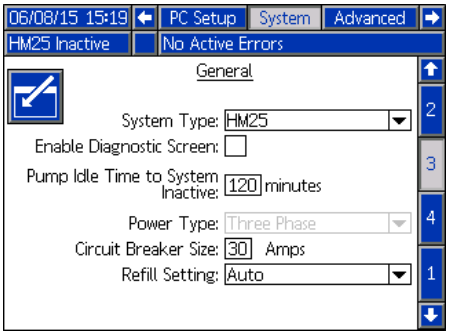




To prevent fire and explosion, never exceed the cleaning fluid's rated temperature.

6. Change the melter, heated hoses, and applicators temperature settings to the high temperature hot melt cleaning fluid manufacturer's recommended temperature.
7. Verify the system air inlet ball valve is closed and pump air pressure is set to 0.
8. Allow the system to heat or cool to the cleaning fluid manufacturer's recommended temperature.
9. Fill melter with high temperature rated hot melt cleaning fluid. See hot melt adhesive material supplier for recommended hot melt cleaning fluids. Fluid level should be 1/2 in. (12.7 mm) from the top of the melter.

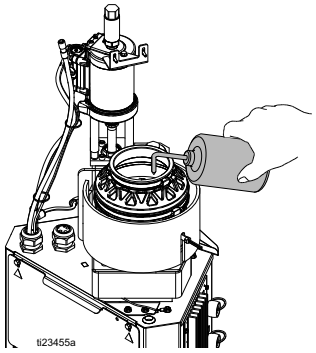


10. Disconnect one hose from its applicator manifold.

Keep all applicators closed throughout this procedure.

11. Route the disconnected hose to a waste container.
12. *If heating system is disabled,* press  to enable the heaters and pump.
13. Wait for the melter temperature to reach the hot melt cleaning fluid manufacturer's recommended temperature.

The pump will not run because the system air inlet ball valve is closed.

14. Once the required melter temperature is reached, let the hot melt cleaning fluid "soak" in the melter at

temperature for the duration specified by the hot melt cleaning fluid manufacturer.

"Soaking" is important to ensure the best possible cleaning.

15. After the hot melt cleaning fluid has "soaked" for the specified amount of time, open the system air inlet ball valve. Slowly increase the pump air pressure until pump begins to cycle to begin pumping the hot melt cleaning fluid and adhesive mixture out through the hose into the waste container.

16. Once the pump begins to cycle faster, close the system air inlet ball valve to stop the pump.

17. Repeat steps 7 through 16 until clean, adhesive-free hot melt cleaning fluid is dispensed from the detached hose.

Now the melter and the disconnected hose are thoroughly flushed.

18. Reattach the hose to the applicator manifold.

19. Repeat steps 7 through 18 for each additional installed hose, leaving a different hose disconnected from the applicator manifold each time.

20. Remove and replace filter(s) in all applicator manifolds. See applicator manual.

21. **Replace Outlet Filter**. See page 41.

22. Turn main power switch OFF.

23. Place waste container below drain tray (W2) then remove drain plug (W1) and wait for system to finish draining. See FIG. 2 on page 14.

24. Allow the system and fluid to cool then perform any required maintenance procedures beginning on page 41.

25. Install fill cap onto melter rubber housing. Re-tighten upper clamp to 25 in-lbs.

26. Slide funnel assembly through air motor bracket then tighten clamp.

27. On the System 3 screen (in the Setup screens), set the Refill Setting to "Auto".

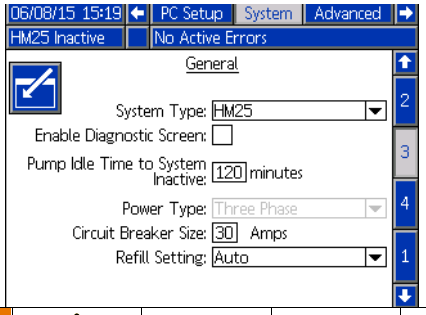


To prevent fire and explosion, never exceed the cleaning fluid's rated temperature. Residual cleaning fluid is still in the system until the system is primed with adhesive.

28. Perform **Initial Startup and Prime** on page 33.

# Operation Tips to Minimize Charring

Set the **Pump Idle Time to System Inactive** function on the System 3 screen to lowest value that will not interfere with normal operation. This feature automatically disables the heating system if the pump is idle for longer than the preset amount of time. Disabling the heating system minimizes adhesive degradation and limits char formation.

When possible, utilize the **Schedule** function, see page 37, to automatically enable and disable the heating system in accordance with your production schedule. This will ensure adhesive spends as little time at temperature as possible. Less time at high temperature ultimately means less adhesive degradation and less char.

***NOTICE***

Set melter, hose, and gun to the same setpoint temperature for best performance. Do not set the hose temperature higher than the melter. Running the hose at a setpoint higher than the melter is unnecessary in this tank-free system and could lead to adhesive degradation in the hose. Short adhesive residence time in the melter eliminates the need to set the melter at a lower setpoint than other zones.

# Maintenance

## Replace Outlet Filter

The outlet filter is designed to prevent small contaminants from entering the hoses and applicators. Inspect filter regularly. Replace the filter after flushing and when you change the adhesive used in the system.

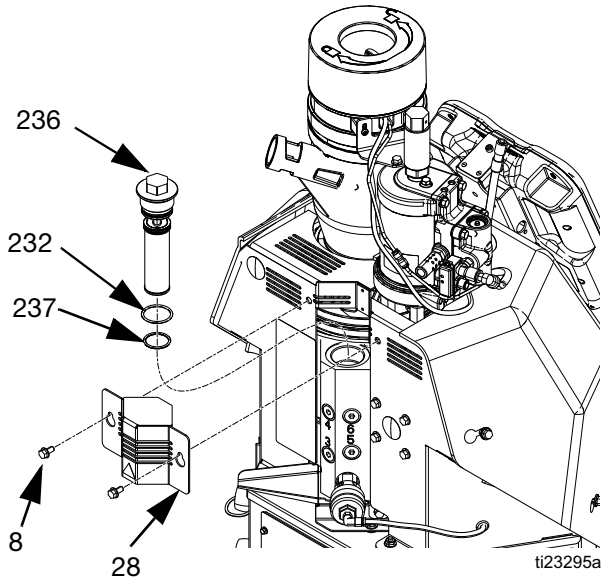


**FIG. 23**

1. *If the system is not up to temperature,* press  to enable the heaters and pump then wait for system to reach operating temperature.



To avoid severe burns, wear protective gloves and clothing that will insulate your hands and body from the hot surfaces and material.

2. Perform **Pressure Relief Procedure**, page 38 but do not allow system to cool. Adhesive must be a fluid to perform this procedure.
3. Turn main power switch OFF.
4. Loosen two screws (8) then slide the small metal shroud (28) on the back of the system up to remove. See FIG. 23.
5. Use a 1 in. socket to unscrew outlet filter (236).
6. Insert allen wrench through the outlet filter cap to lift outlet filter (236) out of the system.
7. Discard outlet filter assembly.
8. Place o-rings (232, 237) provided with new outlet filter onto new outlet filter (236).
9. Place new outlet filter with o-rings into housing. Tighten with 1 in. socket.
10. Install small metal shroud (28) over outlet filter then tighten two screws (8).

## Replace Inlet Filter

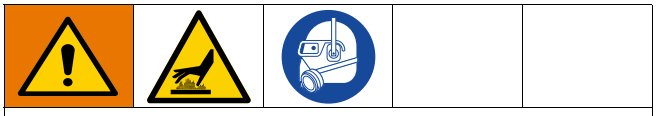

To avoid severe burns, wear protective gloves and clothing that will insulate your hands and body from the hot surfaces and material.

The inlet filter is designed to prevent large items from entering the system. The inlet filter can only be replaced with the system empty.

1. Close the system air inlet ball valve.

Some adhesives have different melting points. The first temperature tried should be approximately half of the dispensing temperature. If dispensing at 400°F (204°C), first try 200°F (93°C) then increase in 20°F (11°C) increments. If dispensing at 250°F (121°C), first try 125°F (52°C) then increase in 20°F (11°C) increments.

To ensure the adhesive is a gel, not a liquid, do not remove inlet filter cap (215) when the temperature is above the desired temperature. If the temperature is too low, the adhesive viscosity may be too high to remove the inlet filter (213). See FIG. 24, page 42.

2. *If the melter is below the desired temperature and heating system is disabled,* press  to enable the heaters.
   *If the melter is above the desired temperature and heating system is enabled,* press  to disable the heaters.
3. Wait until melter temperature is the desired temperature.

4. When the melter temperature is the desired temperature, turn main power switch OFF.
5. Disconnect cable from ADM, push cable through plastic shroud, then remove plastic shroud from system.
6. Place a piece of cardboard beneath the inlet filter cap (215) to route fluid away from system into a waste container in the event the adhesive is a fluid.
7. Use 1 in. socket to remove inlet filter cap (215).

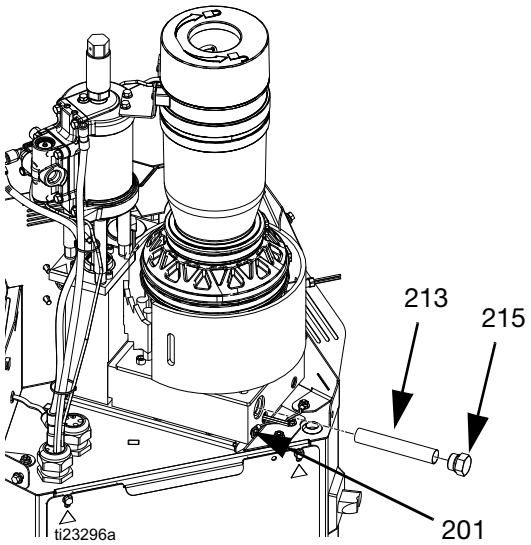


**FIG. 24**

8. *If the adhesive is a thin enough gel to remove the inlet filter:* Use an o-ring pick or small allen wrench to remove filter screen (213) from system. *Otherwise:*
   a. Install inlet filter cap (215).
   b. Install shroud and ADM.
   c. Turn main power switch ON.
   d. Once ADM software finishes starting up, press  to enable the heaters.
   e. Wait for temperature to rise 20°F (11°C) beyond previous temperature.
   f. Go to step 4.
9. Slide new screen (213) into melter base manifold (201).
10. Install filter cap (215) then use a 1 in. socket to tighten.
11. Feed ADM cable through plastic shroud (29) then install shroud onto system. Connect cable to ADM (30).

## Replace Funnel Filter

*Disassembly (see FIG. 25):*

1. Turn main power switch OFF.

*Reassembly (see FIG. 25):*

1. Insert filter (705) in funnel assembly. Tighten funnel cap (706) on funnel.

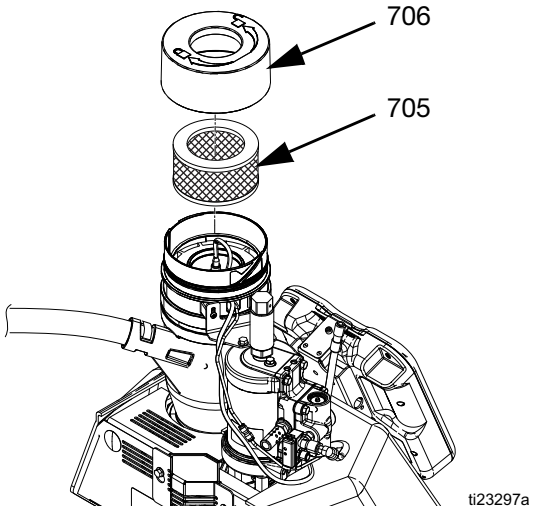


**FIG. 25**

2. Rotate funnel cap (706) and remove. Lift out funnel filter (705).

# Filter Maintenance Guidelines*

| | | | Environmental Classification | | |
|---|---|---|---|---|---|
| **Component** | **Part Number** | **Ref** | **Clean** | **Moderate** | **Dusty** |
| Pump Outlet Filter | 24W595 | 236 | Replace filter every **six** months | Replace filter every **four** months | Replace filter every **two** months |
| Applicator Manifold Filter | 24P802 | 16 + | | | |
| System Air Inlet Filter | 24X967 | 64 | | | |
| Applicator Solenoid Mufflers | 24P282#<br>24X037% | 104+<br>NA | | | |
| Feed funnel filter | 24V506 | 705 | | | |
| Feed funnel inspection/cleanout | N/A | NA | | | |

** These recommendations are service level guidelines - actual service levels required in your factory will vary based on environmental and operating conditions. High or low volume adhesive usage, as well as adhesives that contain a powdered release agent or are otherwise dusty, will have an impact on the frequency of filter maintenance. To establish a preventative maintenance cycle tailored to your environment, Graco recommends inspecting filters every 4 weeks after installation and replacing when necessary. Document replacement intervals and use this as your preventative maintenance schedule moving forward.*

*+ See appropriate applicator manual for part reference drawing.*
*#Standard on GS35 applicators.*
*%Optional upgrade to GM100 applicators.*

# Troubleshooting



**DANGER**

**SEVERE ELECTRIC SHOCK HAZARD**

This equipment can be powered by more than 240 V. Contact with this voltage will cause death or serious injury. Turn off and disconnect all power before disconnecting any cables and before servicing equipment



To avoid injury due to unexpected machine operation initiated by a remote controller, disconnect the customer I/O cable from the system prior to troubleshooting.

## ADM Error Code Table

When an error occurs, press  to acknowledge the error. If a Maintenance error occurs, navigate to the Maintenance screen and press  to clear the error.The last digit of the error code indicates the melter, applicator (gun), or hose to which the error applies. The "_" (underscore) character indicates the code applies to multiple items.

| Last Digit in Code | Code Relates to: |
|---|---|
| 0 | Melter |
| 1 | Applicator (Gun) 1 |
| 2 | Hose 1 |
| 3 | Applicator (Gun) 2 |
| 4 | Hose 2 |
| 5 | Applicator (Gun) 3 |
| 6 | Hose 3 |
| 7 | Applicator (Gun) 4 |
| 8 | Hose 4 |
| 9 | Applicator (Gun) 5 |
| A | Hose 5 |
| B | Applicator (Gun) 6 |
| C | Hose 6 |

An alarm will disable the heating system and pump. A deviation or advisory will not disable the heating system and pump.

| Code | Description | Type | Cause | Solution |
|---|---|---|---|---|
| A1D0 | Low Current Melter | Advisory | Melter current is less than 500mA. | Check heater resistance and resistance to ground. Replace heater(s). See Replace Heater Rod, page 69. |
| A1D_ | Low Current Gun X | Advisory | Applicator current is less than 500mA. | Verify applicator heater has a minimum wattage of 90 Watts at 240 VAC. Check heater resistance and resistance to ground. Replace heater. |
| A1D_ | Low Current Hose X | Advisory | Hose current is less than 500mA. | Check heater resistance and resistance to ground. Replace hose. |
| A3MF | High Fan Current, Transformer | Deviation | Transformer fan is greater than 600mA. | Replace transformer fan. |
| A4D0 | High Current Melter | Alarm | Band heater or rod heater. | Measure resistance to ground between heater leads. Should be a high reading. Replace heater. |
| A4D_ | High Current Hose X | Alarm | Hose power wires. | Check heater resistance and resistance to ground. Replace heated hose. |
| A4D_ | High Current Gun X | Alarm | Heater rods in applicator manifold. | Check heater resistance and resistance to ground. Replace applicator manifold. |
| A7D0 | Unexpected Current | Alarm | Unexpected current flow to melter. | Check heater resistance and resistance to ground. Replace faulty heater(s). See **Replace Heater Rod**, page 71. |
| | | | | Replace MZLP. |
| A7D_ | Unexpected Current, Gun X | Alarm | Unexpected current flow to applicator X. | Check heater resistance and resistance to ground. Replace applicator manifold. |
| | | | | Replace MZLP. |
| A7D_ | Unexpected Current, Hose X | Alarm | Unexpected current flow to hose X. | Check heater resistance and resistance to ground. Replace hose. |
| | | | | Replace MZLP. |
| A8D0 | No Current Melter | Alarm | Power not getting to melter. | Check fuses F1 and F2 on MZLP with daughter board. |
| | | | | Check J1 is plugged into MZLP with daughter board and J3 on AWB. |
| | | | | System needs a hose connected to Channel 1 or use the optional Overtemperature Jumper, 16Y727. |
| A8D_ | No Current Hose X | Alarm | Power not getting to hose. | Check fuses F5 and F6 (channels 1, 3, 5) or F9 and F10 (channels 2, 4, 6) on MZLP that the error hose is connected to. |
| | | | | Check that electrical connector on the heated hose is plugged into the MZLP. |
| | | | | Check continuity of pins C and D on electrical connector at MZLP end of heated hose. See heated hose manual for impedance measurements. Replace hose if readings are too high. |
| | | | | If system only uses one hose and applicator, the heated hose electrical connector must be plugged into channel 1 of the MZLP. |

| Code | Description | Type | Cause | Solution |
|---|---|---|---|---|
| A8D_ | No Current Gun X | Alarm | Power not getting to applicator. | Check fuses F3 and F4 (channels 1, 3, 5) or F7 and F8 (channels 2, 4, 6) on MZLP that controls the error channel. |
| | | | | Check that electrical plug on hose is plugged into back of MZLP and applicator is plugged into hose. |
| | | | | Check continuity of hose pin A gun end to J on MZLP connector end of hose and pin C on gun end to pin A on the MZLP end of the hose. Reading should be 0-1 ohm. Replace hose if measurement is outside this range. |
| | | | | If system only uses one hose and applicator, electrical connector of the heated hose must be plugged into channel 1 of the MZLP. |
| A8MF | No Fan Current, Transformer | Deviation | Power not getting to transformer fan. | Verify that fan power cable is plugged into J7 on the AWB. |
| | | | | Verify transformer fan is free of obstructions and can spin freely. |
| CAC_ *1=MZLP 1 2=MZLP 2 3=MZLP 3* | Comm Error Module | Alarm | System not responding to ADM. | Dial not set correct on MZLP. Set to 1 on board with daughter board. Set to 2 on MZLP without the daughter board in center of electrical enclosure. Set to 3 on MZLP without daughter board on left of electrical enclosure. |
| | | | | System is not properly loaded with correct software. Perform **Software Update Procedure** on page 84. |
| CACX | Missing DB | Alarm | System not acknowledging the daughter board. | Bad connection between daughter board and MZLP board. Loosen daughter board, re-seat, then secure. |
| | | | | Daughter board is not plugged into MZLP1. Plug daughter board into MZLP with dial set to 1. |
| | | | | Replace MZLP daughter board. |
| DADX | Pump Runaway | Alarm | Pump is trying to feed adhesive, no adhesive to feed. | Storage bin out of adhesive. Refill adhesive. |
| | | | | Level sensor may be over heating. Verify air is being delivered from tube (35). |
| | | | | Melter at incorrect temperature, too low. Check setpoint and set to manufacturer's recommendation. |
| | | | | Plugged vacuum transfer hose or funnel. Clear plugged hose or funnel. |
| | | | Worn or damaged pump seals | Inspect pump seals. Repair if necessary. |

| Code | Description | Type | Cause | Solution |
|---|---|---|---|---|
| DDDX | Pump Diving | Deviation | Pump is trying to feed adhesive, no adhesive to feed. | Storage bin out of adhesive pellets. Refill with pellets. |
| | | | | Level sensor may be over heating. Verify air is being delivered from tube (35). |
| | | | | Melter at incorrect temperature, too low. Check melter temperature setting and set to manufacturer's recommendation. |
| | | | | Plugged vacuum transfer hose or funnel. Clear plugged hose or funnel. |
| | | | | Dispense rate too high. See technical ratings of system. |
| | | | Worn or damaged pump seals | Inspect pump seals. Repair if necessary. |
| DE0X | Cycle Switch Error | Alarm | No signal from air motor sensor. | Check wiring on J16 of the daughter board. See **Electrical Schematics** on page 85. |
| | | | | Loose cycle switch bolt. Tighten cycle switch bolt. |
| | | | | Replace cycle switch. |
| L0FX | Manual Fill Mode | Advisory | System set to manual fill mode. | Change to auto fill mode. See Setup Screen System 2. |
| L6FX | Level Sensor Error | Alarm | No signal from the level sensor. | Check for sensor LED illumination. |
| | | | | Check that sensor cable is plugged into sensor. |
| | | | | Check connector at J14 of the daughter board. |
| | | | | Remove fill cap and verify there is nothing blocking fill (level) sensor line of sight. |
| | | | | Replace fill (level) sensor. |
| | | | | Check system incoming air pressure is 80-100 psi. |
| | | | No air to fill cap. | Check for sensor cooling air coming from 5/32 in. air line, flow should be 30-60 SCFH. |
| | | | Plugged orifice in fill cap below fill sensor. | Remove fill cap and remove object plugging the orifice. |
| L8FX | Refill timeout | Alarm | Melter did not receive enough adhesive pellets for flow rate. | Inspect storage bin for bridging and blocking. |
| | | | | Storage bin out of adhesive. Refill adhesive. |
| | | | | Plugged inlet feed hose or funnel. Clear plugged hose or funnel. |
| | | | | Low air pressure on feed regulator. Check regulator. See **Setup**, page 18 for air pressure regulations. |
| | | | | Dirty or plugged funnel filter. Replace filter. |
| M8MF | High Temp Runaway, Transformer | Deviation | At the current rate of temp rise, the transformer will over heat in 15 minutes or less. | Verify that fan power cable is plugged into J7 on the AWB. |
| | | | | Verify transformer fan is free of obstructions and can spin freely. |
| | | | | Replace transformer. |
| MMUX | USB Log Full | Advisory | USB logs full. Data loss will occur if not downloaded. | Download USB data. See **Appendix B - USB Downloading, Uploading** on page 133. |
| MNDX | Pump Maintenance Due | Advisory | Cycles are greater than user set maintenance interval. | Perform maintenance and reset "Due" counter to 0 at the Setup Maintenance screen. |

| Code | Description | Type | Cause | Solution |
|---|---|---|---|---|
| T2D0 | Low Temperature, Melter | Deviation | Melter temperature dropped to 15°F(-9°C) below setpoint. | Verify system is operating within meltrate specifications. Consider incoming voltage and breaker setting. |
| | | | | Verify that the fill system (vacuum) is operating correctly. If the level of material in the melter gets too low and a large amount of cold material enters the melter, can cause the temperature to drop significantly. |
| | | | | With the system on and not dispensing verify that the temperature is properly controlled to the setpoint. If system cannot control temperature, verify the RTD is seated inside the melter. |
| | | | | Replace RTD if RTD was seated properly and system cannot control temperature |
| | | | | Check heater resistance and resistance to ground. Replace heater(s). |
| T2D_ | Low Temperature, Gun X | Deviation | Applicator temperature dropped to 15°F(-9°C) below setpoint. | With the system on and not dispensing verify that the temperature is properly controlled to the setpoint. If system cannot control temperature, replace applicator RTD. See applicator manual. |
| | | | | Check heater resistance and resistance to ground. Replace heater. |
| | | | | Dispense rate too high for applicator to maintain setpoint. Consider applicator power and voltage. |
| T2D_ | Low Temperature, Hose X | Deviation | Hose temperature dropped to 15°F(-9°C) below setpoint. | With the system on and not dispensing verify that the temperature is properly controlled to the setpoint. If system cannot control temperature, replace hose. |
| | | | | Check heater resistance and resistance to ground. Replace hose. |
| T4C_ | High MZLP PCB Temp | Alarm | MZLP board is overheating. | Ambient temperature must be under 120°F. |
| | | | | Replace MZLP board. |
| T4D0 | High Temp Melter | Alarm | Melter continues to raise above the setpoint. | Check that RTD is seated in melter correctly. |
| | | | | Check that overtemperature switch is plugged in and check switch resistance. The switch resistance should be near 0 Below 400°F (204°C). |
| | | | | Check melter heaters' resistance to ground. Replace heater if a heater is shorted to ground. |
| | | | | Turn system on without dispensing. Verify temperature is properly controlled to the setpoint. If setpoint is not maintained, replace RTD. If heat continues to rise past setpoint, replace MZLP. |
| T4D_ | High Temp Hose | Alarm | Hose continues to raise above the setpoint. | Turn on system without dispensing. Check if hose can maintain setpoint temperature. If the hoses' RTD readings are unstable, replace hose. If hose continually heats past setpoint, replace the MZLP. |

| Code | Description | Type | Cause | Solution |
|---|---|---|---|---|
| T4D_ | High Temp Gun | Alarm | Applicator assembly continues to raise above the setpoint. | Turn on system without dispensing. Check if applicator can maintain setpoint temperature. If the applicator's RTD readings are unstable, replace the applicator RTD. |
| | | | | Check the applicator heater's resistance to ground if the RTD readings are stable but the applicator's temperature continues to rise. If the heater is shorted to ground, replace the applicator's heater. If heater is not shorted to ground, replace MZLP. |
| T4MX | High Temperature, Transformer | Alarm | Thermistor reading greater than 212°F (100°C). | Verify transformer fan is operating correctly and free of obstructions. |
| | | | | Replace transformer. |
| T6D0 | Sensor Error Melter | Alarm | No reading from RTD. | Verify connector J5 on MZLP board is securely connected. |
| | | | | Replace melter RTD. See **Replace Band Heater Temperature Sensor**, page 69. |
| T6D_ | Sensor Error Hose | Alarm | No reading from RTD. | Hose electrical connector not plugged into MZLP. |
| | | | | Replace hose. |
| T6D_ | Sensor Error Gun | Alarm | No reading from RTD. | Hose electrical connector not plugged into MZLP or applicator electrical connector not plugged into heated hose. |
| | | | | Replace applicator RTD. |
| T6MX | Thermistor Sensor Error, Transformer | Alarm | No reading from transformer thermistor sensor. | Verify that sensor wire is plugged into J7 on AWB. |
| | | | | Replace transformer. |
| T8D_ | No Temp Rise in Gun (all zones) | Alarm | Temperature reading does not change. | Check fuses F3 and F4 (channels 1, 3, 5) or F7 and F8 (channels 2, 4, 6) on MZLP that error channel is connected to. |
| | | | | Replace applicator manifold heater rods. **NOTE:** Heater rods in the applicator manifold can also cause the no current error. |
| | | | | Check resistance of hose wiring. See hose manual for proper resistance range. |
| T8D_ | No Temp Rise in Hose (all zones) | Alarm | Temperature reading does not change. | Check fuses F5 and F6 (channels 1, 3, 5) or F9 and F10 (channels 2, 4, 6) on the MZLP that controls the error channel. |
| | | | | Check resistance of hose wiring. See hose manual for proper resistance range.<br>**NOTE:** Heater wires in the hose can also cause the no current error. |

| Code | Description | Type | Cause | Solution |
|---|---|---|---|---|
| T8D0 | No Temp Rise in Melter (all zones) | Alarm | Temperature reading does not change. | Check fuses F1 and F2 on MZLP with daughter board. |
| | | | | Check that RTD is installed in the melter. |
| | | | | Check J1 is properly plugged into the MZLP with daughter board and in J3 on AWB. |
| | | | | Check heater resistance and compare to reference table. See **Check Heater Rod Resistance**, page 58. |
| | | | | Replace melter heater.<br>**NOTE:** Heater rods in the melter can also cause the no current error. |
| V1I_ | Low Can Voltage | Alarm | Bad or overloaded power supply. | Verify power supply voltage is 24 VDC. If voltage is low, disconnect the screw terminals +V and -V on the power supply and re-check voltage reading. If voltage is correct, then disconnect J8 and J9 from AWB and re-check voltage. If still low replace AWB. If correct, plug in J9 and recheck voltage. If low, replace ADM. If correct, plug in J8. If low, replace MZLP. If voltage is still low, replace power supply. |
| V1MW | Low Line Voltage | Deviation | Incoming line to line voltage has dropped below 175V. | Verify incoming power is correct gauge for current draw and verify incoming power lines are securely attached to disconnect. |
| V4I_ | High Can Voltage | Alarm | Bad or overloaded power supply. | Verify power supply voltage is 24 VDC. If voltage is high, replace power supply unit. |
| V4MW | High Line Voltage | Alarm | Incoming line to line voltage has increased above 265V. | For 3 phase with neutral have qualified electrician verify neutral wire. |
| V6MW | Invalid Power Type | Alarm | During startup incoming line to line power was either below 175V or above 265 V. | Verify incoming power is wired to the disconnect correctly. |
| V8M_ | No line voltage | Alarm | Incoming line voltage is less than 100 VAC. | Measure incoming power with system unplugged. If line voltage is less than 100 VAC, contact qualified electrician to correct the low voltage. |
| WJDX | Pump Solenoid Error | Alarm | No voltage draw from air solenoid for air motor. | Check connector is properly connected to J13 of the daughter board. |
| | | | | Replace air manifold. |
| WKFX | Fill Solenoid Error | Alarm | No voltage draw from air solenoid for fill. | Check connector at J13 of the daughter board. |
| | | | | Replace air solenoids. See page 79. |
| WSUX | USB Invalid Configuration | Deviation | A valid configuration file can't be found for the USB. | System is not properly loaded with correct software. Perform **Software Update Procedure** on page 84. Retry USB download. |
| | | | ADM: not functioning properly. | Replace ADM. |

# Mechanical and Electrical Troubleshooting

| Problem | Cause | Solution |
|---|---|---|
| Refill Timeout Error | The system was unable to refill in less than 30 seconds. | Check hopper for adequate material and material blocking.<br>Verify the vacuum transfer system air pressure is 40-80 psi (60 psi recommended) and that air is flowing to the feed wand while attempting to refill.<br>Restart system. If the error persists after attempting another refill and unit is needed immediately for production, place system into the manual refill mode. See **Manual Refill** on page 35.<br>Check funnel filter. If plugged, see **Replace Funnel Filter** on page 42. |
| The InvisiPac system takes a long time to refill adhesive. | Glue level in hopper is low. | Check hopper for adequate material and material blocking. |
| | Vacuum flow is restricted. | Verify the vacuum transfer system air pressure is 40-80 psi (60 psi recommended) and that air is flowing to the feed wand while attempting to refill. |
| | | Check funnel filter. If plugged, see **Replace Funnel Filter** on page 42. |
| Vacuum transfer not working | Air to vacuum assembly missing. | Verify the vacuum transfer system air pressure is 40-80 psi (60 psi recommended) |
| | Air at system air gauge but not to air to shaker. | Check that air line is connected or not pinched. |
| | Air is at shaker but there is no feed. | Plugged shaker unit, remove from system and remove plug. |
| Adhesive pellets in storage bin not covering shaker head. | Shaker unit not vibrating. | Verify shaker is vibrating during material loading. If not, the ball in the shaker assembly is stuck. Remove shaker housing and separate to clean raceway and ball inside. |
| | Materials are blocking in the hopper. Some adhesive materials are prone to blocking. High ambient temperature and high humidity can increase the likelihood of blocking. | Some materials may require agitation periodically to breakup bridging. |
| Fill Solenoid Error | Failure of the fill solenoid or fill solenoid wiring. | Verify wiring between J13 and the refill solenoid is not damaged.<br>Restart system. If the error persists after attempting another refill and unit is needed immediately for production, place system into the manual refill mode. See **Manual Refill** on page 35. |

| Problem | Cause | Solution |
|---|---|---|
| Level Sensor Error | Failure of the level sensor (20) or sensor cable 16T108 (J14 to level sensor (20)). | Check sensor cable J14 to level sensor (20).<br>Enable Diagnostic screen on ADM then check sensor readings on the Diagnostic screen. Sensor readings should be about 4.3V if melter is completely empty (melter passage holes are visible). The normal operating range is 3.8 to 4.3V. If the sensor is reading more than 4.2V the system should be requesting additional material.<br>Restart system. If the error persists after attempting another refill and unit is needed immediately for production, place system into the manual refill mode. See **Manual Refill** on page 35. |
| The InvisiPac system expels adhesive pellets dust when refilling. | Some adhesives are very dusty due to the anti-blocking agents used or because the adhesive manufacturing process has created small adhesive shavings. Feed inlet cap filter may have become clogged. | **Replace Funnel Filter**, see page 42.<br>**NOTE:** Feed cap filter maintenance should be performed at regular service intervals. It is recommended that the feed cap filter be inspected at a minimum of every 1200 lb dispensed, however with some adhesives the frequency may need to be increased significantly to maintain desired system cleanliness. |
| The InvisiPac system will not stall, pump continues to move even if the applicators are all closed. | Fluid leak. | Verify that no external leakage is present.<br>Inspect and test the pressure relief valve.<br>Perform **Flush Pressure Relief Valve**, page 59.<br>If system is still unable to stall, the pump or pressure relief valve may need to be repaired. |
| The system will not dispense material. | System is not up to temperature. | Verify that the system is active. |
| | Incorrect temperature set points entered into ADM. | Verify the temperature settings are correct. |
| | Air motor is not receiving compressed air or air pressure too low. | Verify that the pump air pressure is set above 20 psi. **Check the Pump Air Solenoid Operation**, page 59. |
| | Feed pump not feeding adhesive. | Repair or replace air control assembly as necessary.<br>Repair or replace pump assembly as necessary. |
| | Timing control for applicators not working. | InvisiPac system does not control the timing of the applicators. This is a separate control that needs to be adjusted. Consult control manufacturer or qualified electrician. |
| Cycle Switch Error | Cycle switch or cycle switch wiring failure. | Check the wiring between the air motor cycle switch and J16. Repair/replace as required. |
| | Loose or missing fastener (26). | Ensure fastener (26) is tight. See **InvisiPac Systems** section beginning on page 92 for part identification. |

| Problem | Cause | Solution |
|---|---|---|
| USB Log Full | The InvisiPac system will display this notification when the USB data logs reach 90% full. | To prevent data loss, download system data. See **Appendix B - USB Downloading, Uploading** on page 133. |
| The InvisiPac system is displaying pump runaway or pump diving. | This error generally occurs when the pump cavitates due to improper material loading. | This can occur if the melt rate for the system is exceeded, resulting in air entrapment within the incoming adhesive material and lower than desired material temperature.<br>1. Verify that the InvisiPac system is not exceeding (11 cpm- HM25, 22 cpm - HM50) by enabling the diagnostic screen.<br>2. If the cycle rate is below (11 cpm- HM25, 22 cpm - HM50)and the system is still running away increase the InvisiPac system temperature in small increments over the current set point.<br>3. If the pump continues to runaway or dive continue increasing temperature in small increments. Do not exceed maximum temperature for the material being dispensed.<br>**NOTE:** If air has become trapped in the pump, it can be purged by following the **Pressure Relief Procedure**, page 38.<br>**NOTE:** Some materials are more difficult to melt than others and it may be impossible to process them at the published melt rate. The InvisiPac system was tested to achieve continuous published melt rates when dispensing standard EVA packaging grade adhesives in pellet form with an InvisiPac system temperature of 350°F and hose and applicator temperatures of 350°F. |
| | Level sensor blocked, reading level incorrect. | Clean feed cap by fill sensor, make sure there are no adhesive pellets blocking the sensor hole. |
| | The system is not supplying enough air to the ultrasonic sensor venturi. | Ensure supplied Air Filter Kit 24R707 is installed on system air inlet.<br>Perform a reverse pressure flush of the sensor venture orifice:<br>1. Disconnect incoming air from InvisiPac system air inlet (108).<br>2. Disconnect air tube poush-connect union (91) from ultrasonic sensor air tube (35).<br>3. Plumb 80-100 psi (550-690 kPa, 5.5-6.9 bar) to outlet end o air tube union (91).<br>4. Ensure air is flowing out of the InvisiPac system air inlet (108).<br>5. Reconnect ultrasonic sensor air tube (35) to air tube union (91). |

| Problem | Cause | Solution |
|---|---|---|
| Unable to achieve published melt rate at the desired adhesive temperature. | The InvisiPac system monitors temperature within aluminum mass of melter (202). As melt rates exceed 20 lb/hr a system temperature offset may be required. | 1. If the cycle rate is below (11 cpm - HM25, 22 cpm - HM50) and the system is still running away increase the InvisiPac system temperature in small increments over the current set point, leave hoses and applicators at desired set point.<br>2. If the pump continues to runaway or dive continue increasing temperature in small increments. Do not exceed maximum temperature for the material being dispensed.<br>**NOTE:** A 50 amp breaker is required in order to maximize startup and flow rate performance. Set the breaker size used in the Setup screens.<br>**NOTE:** Some materials are more difficult to melt than others, therefore it may be impossible to process them at the published melt rate. The InvisiPac system was tested to achieve continuous the published melt rates when dispensing standard EVA packaging grade adhesives in pellet form with an InvisiPac system temperature of 350°F and hose and applicator temperatures of 350°F. |
| ADM not displaying when system turned on | Main power circuit breaker off or power cord unplugged. | Turn main circuit breaker on or plug in power cord. |
| | Cable on ADM unplugged. | Reconnect ADM cable. |
| | Connector on AWB board not plugged in. | ADM cable should be plugged into J9 of the AWB board. |
| | Bad 24VDC power supply. | Check output on power supply should measure 24VDC, if no voltage reading replace power supply. |
| | ADM not functioning properly. | Replace ADM. |
| Main breaker tripping | Wrong setting in ADM breaker setup. | Wrong breaker setting on ADM in the breaker setting in the setup screen. |
| | Internal short to ground in system. | Unplug or disconnect power and measure between each leg of the power to ground. There should be an open resistance reading. |
| | Too small of a circuit breaker in main power panel. | Consult qualified electrician for proper size circuit breaker. |

| Problem | Cause | Solution |
|---|---|---|
| Slow start-up time or system takes longer than 10 minutes to startup | Wrong setting in ADM breaker setup. | Wrong breaker setting on ADM in the breaker setting in the setup screen. |
| | Low incoming voltage. | Incoming voltage should be 200-240VAC for a 230 volt unit and 380-400 VAC for a 400 volt unit. |
| | Heater rod in melter and gun manifold. | Measure and check heater rods in melter or applicator. See applicator manual. See **Check Heater Rod Resistance**, page 59. |
| | Heated hose. | Measure heater wires in hose, pins C and D. See repair section for each hose resistance. |
| | Insufficient power supplied to system. Depending on hose and applicator combinations, along with minimal supply power, startup time will vary. | Connect system to a power supply capable of maximum power per system specification. All changes must be performed by a qualified electrician. See **Models** on page 4 for full-power rating. See **Startup Time**, page 138, for startup times under varying conditions. |
| No adhesive or little adhesive being dispensed | Incorrect RTD setting in system. | 1. Verify melter, hose, and applicator temperatures are all with in the same range of the room ambient.<br>2. If the applicator temperature is either much higher or much lower than the melter temperature then the RTD setting is not correct for the RTD being used. Select correct RTD setting in the setup screen system 2 before beginning.<br>**NOTE:** Failure to have the correct RTD value will cause the applicator to either under-heat or over-heat. Setting for RTD in the ADM screens is higher than actual RTD value. Consult manufacturer for actual RTD value. |
| System indicates no errors and correct temperature however applicator is over the temperature setpoint | Incorrect RTD setting in system. | 1. Verify melter, hose, and applicator temperatures are all within the same range of the room ambient.<br>2. If the applicator temperature is either much higher or much lower than the melter temperature then the RTD setting is not correct for the RTD being used. Select correct RTD setting in the setup screen system 2 before beginning.<br>**NOTE:** Failure to have the correct RTD value will cause the applicator to either under-heat or over-heat. Setting for RTD in the ADM screens is lower than actual RTD value. Consult manufacturer for actual RTD value. |

| Problem | Cause | Solution |
|---|---|---|
| No adhesive or incorrect amount of adhesive output when all dispense modules are triggered | Plugged applicator manifold filter. | Replace applicator manifold filter. Graco applicator manifold filter in bottom of manifold or inline filter on other applicators. |
| | Clogged hose. | Flush or replace hose. |
| | Solenoid valve. | Check that correct voltage is input into solenoid valve. If voltage is correct, replace solenoid. |
| | No signal from control to solenoid. | If no voltage is present at solenoid, check control cable and pattern controller. Replace component. |
| | Solenoid mufflers plugged. | Replace solenoid mufflers. |
| | No air to air solenoid. | Re-establish air supply to solenoid. |
| | Plugged system outlet filter. | **Replace Outlet Filter**. See page 41. |
| | If multiple applicators are triggered simultaneously, maximum pump rate may be exceeded. | Stagger applicator opening to reduce the maximum required flow rate to below maximum pump rate. |
| No adhesive or incorrect amount of adhesive out of one/some of the dispense modules when triggered | Plugged tip on dispense module. | Replace tip on dispense module. |
| | Dispense module in closed/partial open position. | Replace dispense module. |
| | Plugged applicator manifold filter (single dispense module applicator). | Replace applicator manifold filter. Graco applicator manifold filter in bottom of manifold or inline filter on other manifolds. |
| | Clogged hose | Flush or replace hose. |
| | Solenoid valve | Check that correct voltage is input into solenoid valve. If voltage is correct, replace solenoid. |
| | No signal from control to solenoid | If no voltage is present at solenoid, check control cable and pattern controller. Replace component. |
| | Plugged solenoid mufflers | Replace solenoid mufflers. |
| | No air to solenoid | Re-establish air supply to solenoid. |
| | Plugged system outlet filter. | **Replace Outlet Filter**. See page 41. |
| | If multiple applicators are triggered simultaneously, maximum pump rate may be exceeded. | Stagger applicator opening to reduce the maximum required flow rate to below maximum pump rate. |

| Problem | Cause | Solution |
|---|---|---|
| Adhesive flowing out of one/some applicators when not triggered | Failed valve in the open position. | Replace dispense module. |
| | Adhesive pressure too high. | Reduce air pressure to air motor. |
| Applicator will not heat. | Heat rod failure in applicator manifold. | Check resistance on heater rods. Repair applicator manifold if heater rods measure open. |
| | Loose cable connection at system or manifold. | Check cable connections on both ends of the hose. |
| | RTD failure. | Check resistance on the RTD, if out of normal range replace RTD. |
| | Incorrect RTD setting in the ADM setup. | Set correct RTD value in the ADM setup screen. Consult manufacturer for correct RTD value. |
| | Thermal cutoff is tripped. | Measure resistance of the thermal cutoff at room temperature. If open, replace. |
| Adhesive leaking from manifold or dispense module. | Dispense module is loose on the manifold. | Tighten screws on loose dispense module. |
| | Dispense module o-ring failed. | Replace o-rings on the back of the leaking dispense module. |
| | Failed dispense module, adhesive leaking out middle of dispense module. | Replace dispense module. |
| | Hose loose. | Tighten hose. |
| No melter heat. | Fuse blown in F1 and F2. | Check heater rods for a short or a short between the rod wires and ground. |
| | Cable to over-temperature switch off or broken. | Check connection of cable to over-temperature switch both to main board and to switch. If connection good, look for break in wire. |
| | Over-temperature switch tripped. | Measure over-temperature switch resistance. It should read close to 0 ohms when at room temperature. If open, replace over-temperature switch. Make sure main system power is off when making measurement. |
| Air motor will not function. | No air being supplied to air motor. | Check incoming air supply. air motor is disabled until system reaches “Active” state. When “Active”, the pump air solenoid should supply air to the air motor. |
| | Air solenoid not enabling the air motor. | Check solenoid voltage, if 24VDC present at air solenoid replace air solenoid. |
| | Air present at air motor but it will not work. | Replace air motor. |
| System not turning on. | No power to unit. | Check main power breaker is turned on.<br>Check that power plug is connected. |

| Problem | Cause | Solution |
|---|---|---|
| Static shock when touching shaker or adhesive bin. | Ground wire not in place on shaker assembly. Some adhesives, flow rates, and ambient conditions can cause excessive static buildup on the shaker tube. | Attach a ground wire from the shaft of the shaker unit to a true earth ground. Order shaker grounding kit 24R708. |
| Adhesive not dispensing at the correct time. | Dispense modules opening at the wrong time. | InvisiPac system does not control the opening and closing of the applicators. The separate controller needs to be adjusted. Consult pattern control manufacturer or qualified electrician. |
| Pump and vacuum feed system cycle on and off before temperature setpoint is achieved. | Solenoid connector is installed into the light tower plug on the MZLP daughter board | Move solenoid connector from J12 (light tower) to J13 (solenoid valves) on the daughter board on the MZLP. |

### Flush Pressure Relief Valve



Perform this procedure when directed in the Troubleshooting table.

1. With the system active at the required adhesive temperature, set the air motor air pressure to 20 psi (140 kPa, 1.4 bar).
2. Remove the air line (36) from the pressure relief valve.

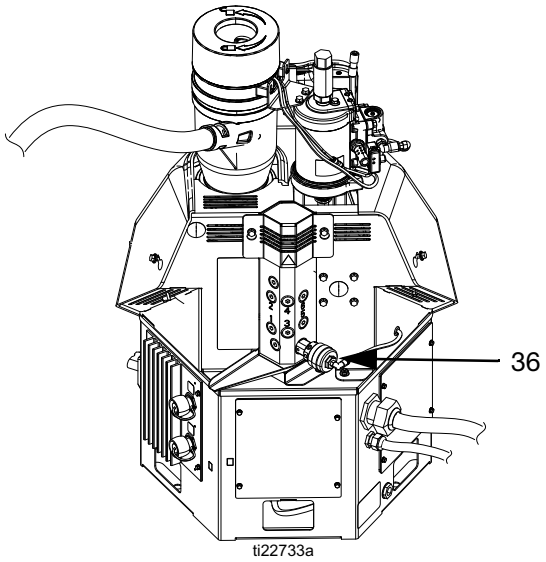


**FIG. 26**

3. Plug air line and allow the air motor to cycle.
4. Re-connect air line to relief valve and check whether the system will stall.
5. *If system still does not stall,* purge ten pump cycles of material through one applicator.
6. Repeat this entire procedure until no additional air is expelled from the applicator.

### Check the Pump Air Solenoid Operation



Perform this procedure when directed in the Troubleshooting table.

System must be up to operating temperature for pump solenoid to trigger on.

1. *If the heating system and pump is disabled,* press  to enable the heaters and pump.
2. Wait for system to reach the temperature setpoints.
3. Set pump air pressure to 20 psi (140 kPa, 1.4 bar).
4. Remove the 3/8 in. OD air line from the air motor.
5. Verify that air is flowing through the air line.
6. *If air is not flowing,* check the wiring between J13 and the pump solenoid.

### Check Heater Rod Resistance

Use the table to determine if heater elements need to be replaced.

| Ref. | Element | HM25 | | HM50 | |
|---|---|---|---|---|---|
| | | Wattage | Ohms | Wattage | Ohms |
| 208 | Band Heater | 1250 | 41-51 | 2000 | 26-32 |
| 209 | Melter Rod | 500 | 103-127 | 1500 | 34-42 |
| 210 | Base Rod | 1500 | 34-42 | 1000 | 52-64 |
| 271 | Pump Rod | 1500 | 34-42 | 1000 | 52-64 |

# MZLP Troubleshooting

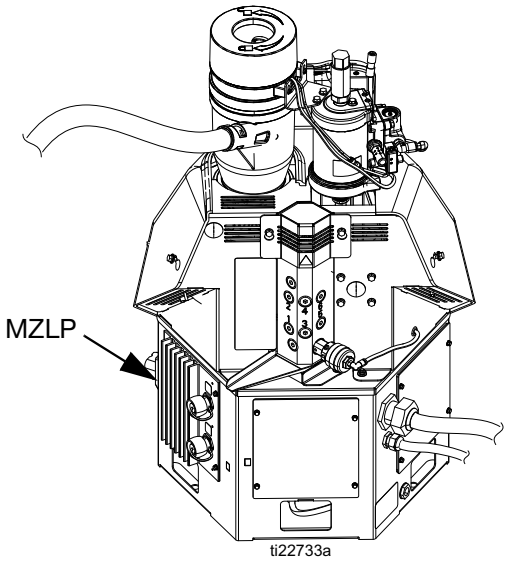


**FIG. 27: MZLP LED Signals**

The MZLP LED is located on the inside of the electrical enclosure. To view, remove the electrical enclosure front access door.

| Signal | Description |
|---|---|
| Green On | MZLP is powered up and input voltage is within operating conditions. |
| Yellow On | Internal communication in process |
| Red Solid | MZLP failure. See troubleshooting table. |
| Red Flashing | Software update in process or missing software. |

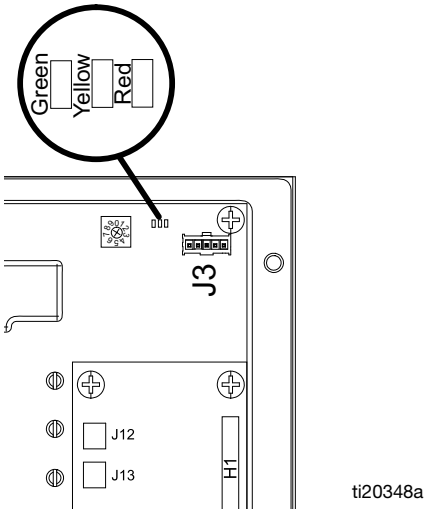


**FIG. 28: MZLP Diagnostic LED Location**

# Repair

Some procedures require special tools. Read through each procedure prior to beginning it to ensure you have the required tools to complete the entire procedure. Order any required tools and have them on hand prior to beginning the procedure.

**NOTICE**

When performing any procedure that requires removal of seals or other soft parts, do not leave a system that has not been flushed disassembled for more than 30 minutes to prevent the adhesive from hardening. Hardened adhesive will damage the seals and other soft parts during installation.

## Pump

### Replace Throat Seal, Throat Bearing, Piston Rod, Piston Seal, and Piston Bearing



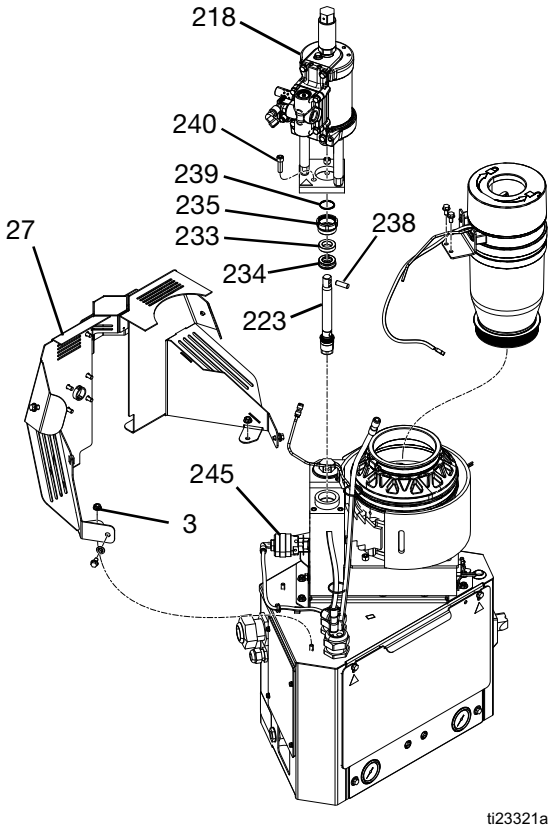


FIG. 29

**Disassembly (see FIG. 29):**

1. **Flush** the system. See page 39.
2. Close the bleed-type ball valve installed at the system air inlet to relieve all air pressure in the system.
3. Turn main power switch OFF.
4. Remove plastic shroud (27).
5. Remove vacuum transfer inlet funnel.
6. Remove air lines from relief valve (245) and air motor (218).
7. Remove four nuts (3) securing melter shield (27) in place then remove melter shield.
8. Remove air motor assembly:
   a. Remove retaining ring (239).
   b. Remove dowel pin (238).
   c. Remove three screws (240).
9. Use a flat head screwdriver and a rubber mallet to break loose the retaining nut (235).
10. Use channel lock pliers to remove the retaining nut (235).

Insert an allen wrench through the hole in the top of the piston rod (223) to lift the piston rod (223) up out of the manifold. This will also pull out the throat u-cup (234) and throat bearing (233)

**Reassembly (see FIG. 29):**

1. To protect the seals from the sharp threads, place seal installation tool 15B661 into the throat bore. See FIG. 30.

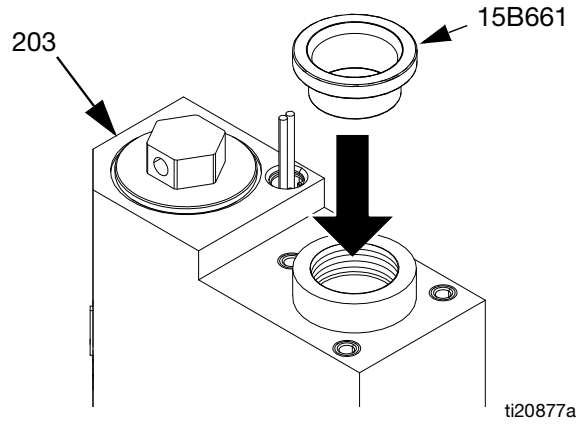


**FIG. 30**

2. Push the piston rod assembly (223) into the melter outlet manifold (203).

3. Grease the throat u-cup (234) and slide the u-cup over the piston rod (223) with the lips facing down.

4. Place a 7/8 in. deep-well socket (3/8 in. drive) over the piston rod (223) then use a rubber mallet to gently tap throat u-cup (234) into place. See FIG. 31.

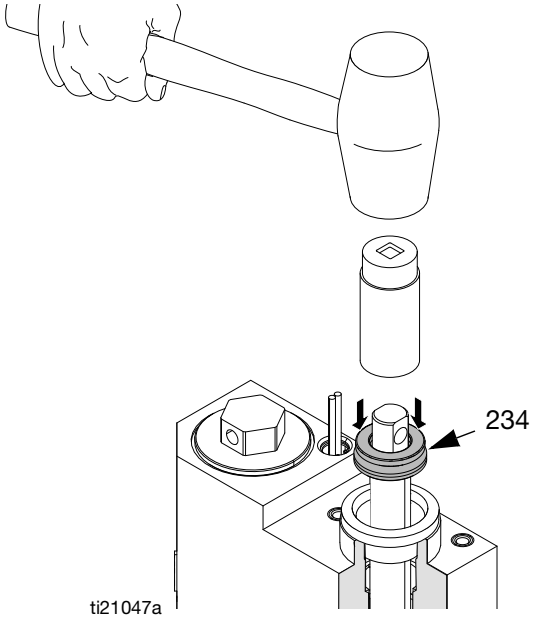


**FIG. 31**

5. Slide throat bearing (233) over the piston rod (223). Use socket and tap with a rubber mallet to press throat Remove seal installation tool.

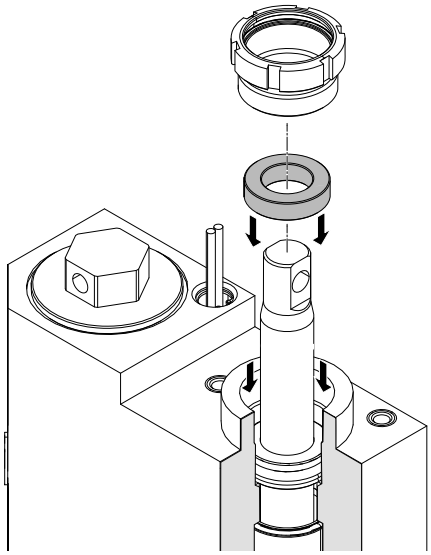

**FIG. 32**

6. Remove seal installation tool.
7. Install retaining nut (235). See FIG. 30.
8. Install air motor assembly (see FIG. 29):
   a. Install three screws (240).

With retaining ring around piston rod, install dowel pin (238).

   b. Install retaining ring (239) over dowel pin.

9. Use nuts (3) to install melter shield (27).
10. Connect air lines to relief valve and air motor.
11. Install plastic shroud (27).

**Replace Pump Inlet Housing Checks**



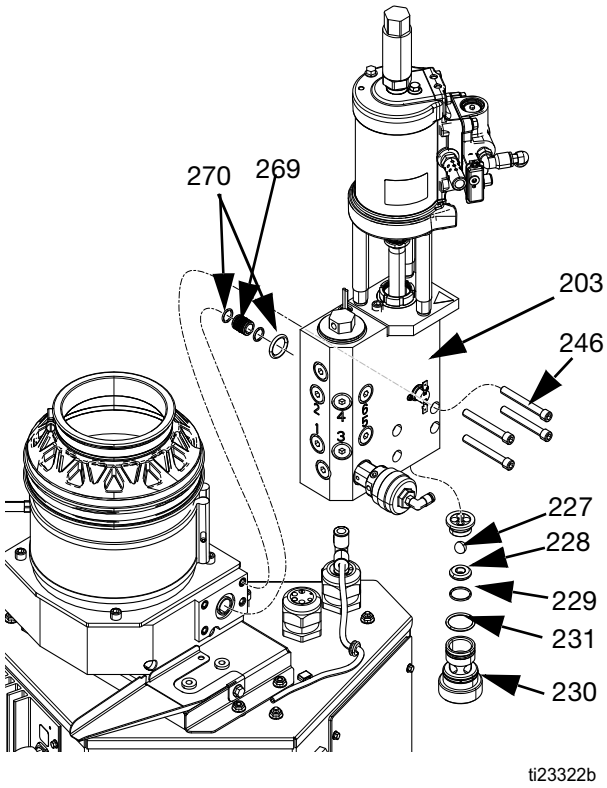


**FIG. 33**

**Disassembly (see FIG. 33):**

1. **Flush** the system. See page 39.
2. Close the bleed-type ball valve installed at the system air inlet to relieve all air pressure in the system.
3. Turn main power switch OFF.
4. Remove four bolts (246) and pump manifold (203) from melter outlet.
5. Remove cross over tube (269) and discard o-rings (270).
6. Use a 1/2 in. drive ratchet without a socket to remove foot valve (230) from bottom of melter outlet manifold (203).
7. emove and discard seat (228), ball (227), o-ring (229), and o-ring (231)

Reassembly (see FIG. 33):

1. Install new o-ring (231), o-ring (229), seat (228), and ball (227) then use a 1/2 in. drive ratchet without a socket to install and tighten foot valve (230) onto melter.
2. Replace cross over tube (269 using new o-rings (270). Angled ring faces the melter base.
3. Apply anaerobic thread sealant on threads of four bolts (246) and connect pump to melter outlet. Torque to 12-18 ft-lb (16-24 N•m).

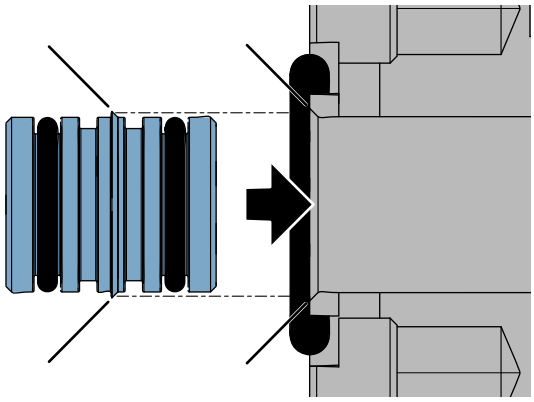


## Replace Pup

## Replace Pump Cylinder Seals and Piston Seals



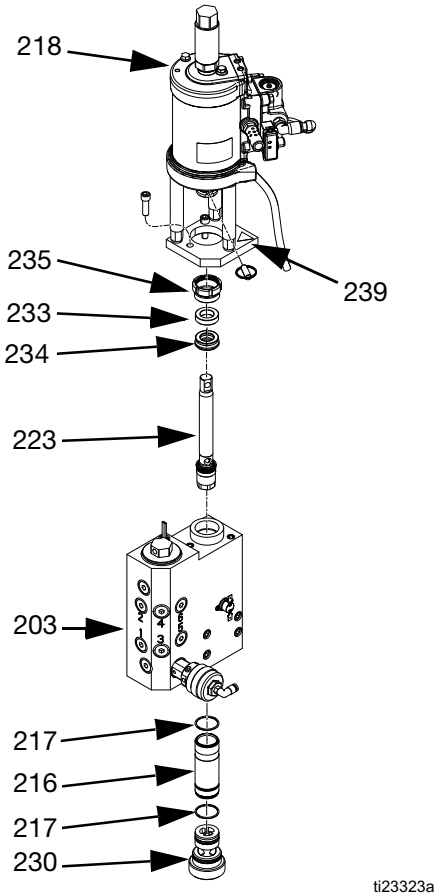


**FIG. 34**

**Disassembly (see FIG. 29):**

1. **Flush** the system. See page 38.
2. Close the bleed-type ball valve installed at the system air inlet to relieve all air pressure in the system.
3. Turn main power switch OFF.
4. Remove plastic shroud (27). See FIG. 29 on page 61.
5. Remove air lines from relief valve (245) and air motor (218) See FIG. 29 on page 61.

6. Remove nuts (3) securing melter shield (27) in place then remove melter shield. See FIG. 29 on page 61.

7. Remove air motor assembly. See FIG. 29 on page 61:

   a. Remove retaining ring (239).

   b. Remove dowel pin (238).

   c. Remove three screws (240).

8. Use a flat head screwdriver and a rubber mallet to break loose the retaining nut (235).

9. Use channel lock pliers to remove the retaining nut (235).

10. Insert an allen wrench through the hole in the top of the piston rod (223) to lift the piston rod (223) up out of the manifold. This will also pull out the throat u-cup (234) and throat bearing (233).

11. **Replace Pump Inlet Housing Checks**. See page 63.

12. Use a 1/2 in. drive ratchet without a socket to remove foot valve (230) from bottom of melter outlet manifold (203). See FIG. 34, page 64.

13. Insert cylinder tool (1301) into bottom of melter outlet manifold (203). Use a rubber mallet to gently remove cylinder (216).

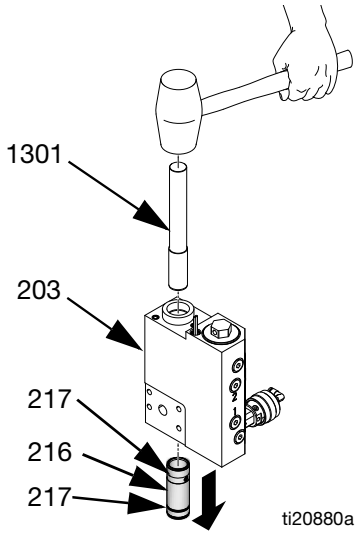


**FIG. 35**

14. Remove and discard cylinder seals (217). See FIG. 35.

**Reassembly:**

1. Apply grease to seals (217) then install new cylinder seals (217) onto cylinder (216). See FIG. 35.

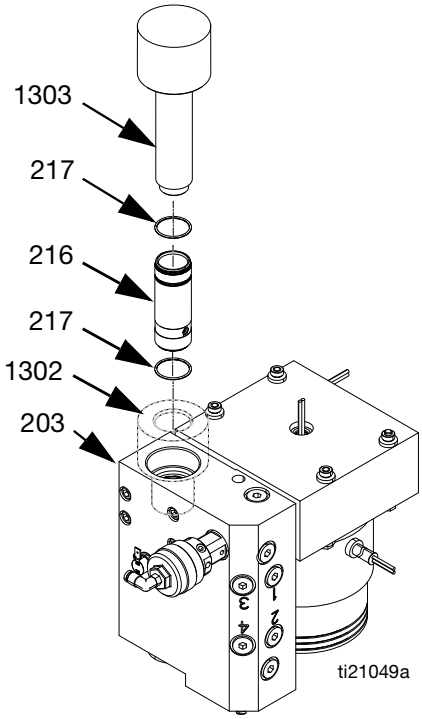


**FIG. 36**

2. Place female cylinder installation tool (1302) into melter outlet manifold (203) to protect seals from sharp threads. See FIG. 36.

3. Use male cylinder installation tool (1303) to press cylinder (216) into melter outlet manifold (203). If necessary, use rubber mallet tap into place. See FIG. 36.

4. Use a 1/2 in. drive ratchet without a socket to install and tighten foot valve (230) into bottom of melter outlet manifold (203). See FIG. 34, page 64.

5. Perform **Replace Pump Inlet Housing Checks** on page 63.

6. Perform *Reassembly* portion of the **Replace Throat Seal, Throat Bearing, Piston Rod, Piston Seal, and Piston Bearing** procedure which starts on page 61.

# Melter

**DANGER**
**SEVERE ELECTRIC SHOCK HAZARD**
This equipment can be powered by more than 240 V. Contact with this voltage will cause death or serious injury. Turn off and disconnect all power before disconnecting any cables and before servicing equipment.

### Remove Melter Assembly



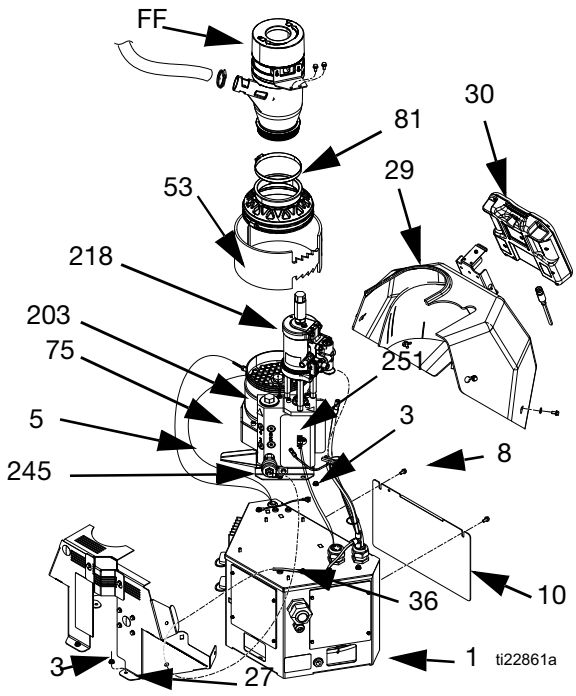


**FIG. 37**

This only needs to be done when replacing items that require access to the bottom of the melter assembly.

1. Perform **Drain the System** procedure on page 38 then wait for system to cool.
2. Close the bleed type ball valve at the system air inlet.
3. Turn main power switch OFF.
4. Disconnect all heated hoses from the melter outlet manifold.
5. Remove cable from ADM (30) then slide forward the shroud (29) and remove it from the system.
6. Remove screws (8) then remove electrical enclosure front access door (10).
7. Disconnect heater rod wires from J4 connector on AWB board.
8. Remove the air tube (36) from the relief valve (245). Pull the air tube from the metal shroud (27).
9. Remove nuts (3) on the back metal shroud (27) then remove shroud.
10. Remove fabric melter insulator (53).
11. Loosen screw (AA) then remove sensor (125). See FIG. 40, page 69.
12. Loosen hose clamp (81) then remove funnel (FF).
13. Remove wire connectors from the over-temperature switch (251).
14. Remove insulators (53, 75) from the melter assembly (5).
15. Disconnect the fill sensor cable from the fill sensor (20). See **Replace Fill Sensor**, page 76.
16. Disconnect the pump cycle sensor cable from the air motor.
17. Remove the air tube from the air motor (218).
18. Loosen screw (AA) then remove sensor (125). See FIG. 39 on page 68.
19. Disconnect ground screw (87) and ring terminal (88) from melter assembly.

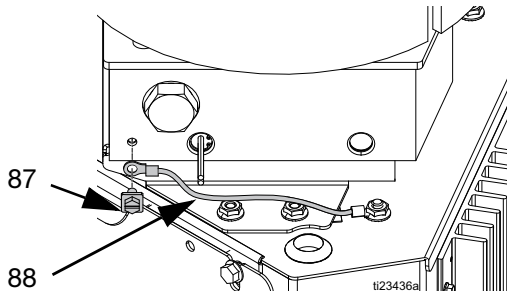


**FIG. 38**

20. Remove electrical enclosure front access door (10).

21. Remove all heater wires from the following terminals. Pull wires up through the rubber grommet on the top of the electrical enclosure (1).

| Item | Wire Marking 1 | Wire Marking 2 |
|---|---|---|
| Band Heater (208) | J4-1 | J4-2 |
| Melter Heater Rod (209) | J4-5 | J4-6 |
| Base Heater Rod (210) | J4-7 | J4-8 |
| Pump Heater Rod (271) | J4-3 | J4-4 |

22. Remove four nuts (3) then remove melter assembly from system. Save any loose insulators for reassembly.

23. Remove bolts (259), insulators (249), washers (268), and melter assembly from base (257).

### Install Melter Assembly



**DANGER**

**SEVERE ELECTRIC SHOCK HAZARD**

This equipment can be powered by more than 240 V. Contact with this voltage will cause death or serious injury. Turn off and disconnect all power before disconnecting any cables and before servicing equipment.



1. Route melter heater rod (209) wire through large hole in the melter base (257) then through small hole in side of melter base (257).

2. With the 10 insulators (4) in place on the melter assembly, place melter assembly on melter base (257).

**NOTICE**

To prevent crushing the soft insulators (4), do not overtighten the 4 bolts (259) in the following step. Torque to 5-11ft-lb (7-15 N•m).

3. Use 4 bolts (259) to secure washers (268) and melter assembly to melter base (257).

4. Use four nuts (3) to secure melter assembly to system.

5. Group the 4 sets of heater wires together and run them through the grommet on the top of the electrical enclosure (1). Connect wires as noted below.

| Item | Wire Marking 1 | Wire Marking 2 |
|---|---|---|
| Band Heater (208) | J4-1 | J4-2 |
| Melter Heater Rod (209) | J4-5 | J4-6 |
| Base Heater Rod (210) | J4-7 | J4-8 |
| Pump Heater Rod (271) | J4-3 | J4-4 |

6. Connect air tube to air motor (218).

7. Connect fill sensor cable to the fill sensor (20).

8. Connect pump cycle sensor cable to air motor.

9. Install funnel (FF) then tighten clamp (81).

10. Install temperature sensor (125) into melter then tighten screw (AA) on band heater. See FIG. 39 on page 68.

11. Install insulators (53,75) onto the melter assembly (5).

12. Connect ground wire ring terminal (87) and ground screw (88) to melter assembly (5).

13. Connect wire connectors to the over-temperature switch (251). See FIG. 41 on page 70.

14. Use nuts (3) to install metal shroud (27).

15. Pull the relief valve air tube (36) through the metal housing then attach air tube to relief valve (245).

16. Install front access door (10) onto electrical enclosure (1).

17. Feed ADM cable through shroud then install shroud and connect cable to ADM.

18. Reconnect all heated hoses to the melter outlet manifold (203).

19. Turn main power switch ON.

20. Open system air inlet ball valve.

### Replace Band Heater



**DANGER**

**SEVERE ELECTRIC SHOCK HAZARD**

This equipment can be powered by more than 240 V. Contact with this voltage will cause death or serious injury. Turn off and disconnect all power before disconnecting any cables and before servicing equipment.



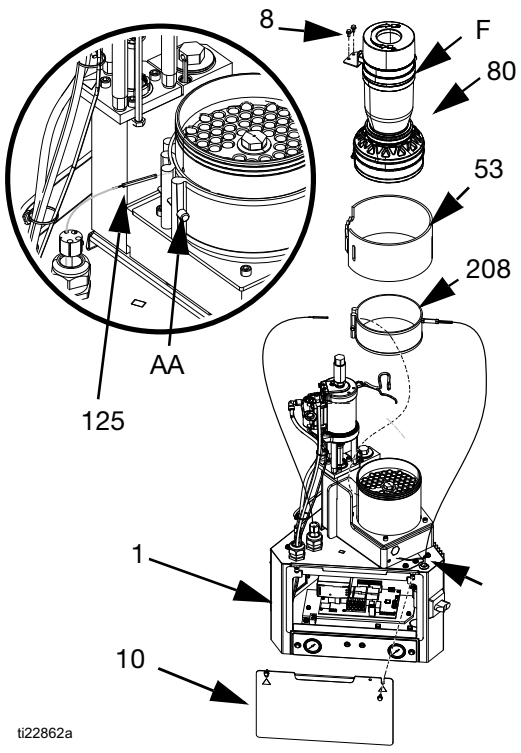


**FIG. 39**

### Disassembly (see FIG. 39):

1. Once the fluid level is low enough, close the bleed-type ball valve installed at the system air inlet.
2. Turn main power switch OFF.
3. Disconnect cable from ADM (30) then remove shroud (29).
4. Remove front access door (10) from electrical enclosure (1).
5. Remove fabric melter insulators (53).
6. While system is still near operating temperature, loosen clamp (80) and then remove screws (8) and funnel assembly (F). When removing rubber housing from melter, separate rubber from melter by pressing on inside surface.
7. Loosen screw (AA) then remove sensor (125).
8. Locate the J4-1 and J4-2 wires in AWB board and remove wires.
9. Pull wires up through grommet (63) on top of the electrical enclosure (1). Clip any wire ties that hold the wires in place.
10. Continue loosing screw (AA) then slide band heater (208) up to remove.

### Reassembly (see FIG. 39):

1. Install band heater (208) on the melter with the opening and screw facing the front of the system in alignment with the sensor port.
2. Install sensor (125).
3. Slide band heater up then tighten screw (AA).

Band heater should be oriented to hold sensor in place when tightened. It should not bend the sensor.

4. Route band heater wires through grommet (63) in the top of the electrical enclosure (1).
5. Connect wires to AWB board as marked. Wires should be marked as shown in the following table.

| Item | Wire Marking 1 | Wire Marking 2 |
|---|---|---|
| Band Heater (208) | J4-1 | J4-2 |

6. Install electrical enclosure access door (10). See FIG. 39.
7. Use clamp (80) and screws (8) to install funnel assembly (F) on melter assembly. Ensure rubber housing is fully seated on melter or incorrect

refilling may occur. Tighten band clamps to 25 in-lbs.

8. Install fabric melter insulator (53).
9. Feed ADM cable through shroud then install shroud and connect cable to ADM.
10. Open system air inlet ball valve.
11. Turn main power switch ON.

### Replace Band Heater Temperature Sensor

**DANGER**
**SEVERE ELECTRIC SHOCK HAZARD**
This equipment can be powered by more than 240 V. Contact with this voltage will cause death or serious injury. Turn off and disconnect all power before disconnecting any cables and before servicing equipment.

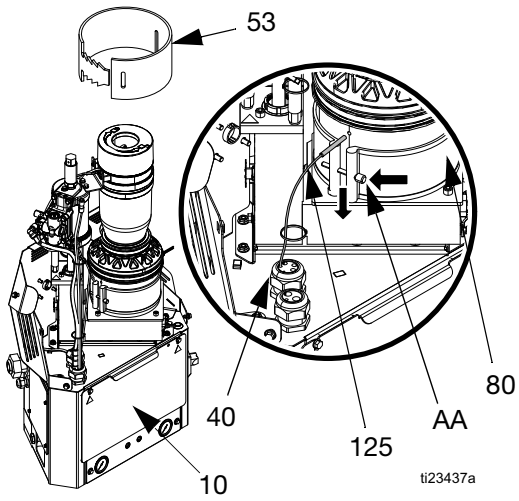


**FIG. 40**

**Disassembly (see FIG. 40):**

1. Close the bleed-type ball valve installed at the system air inlet to relieve all air pressure in the system.
2. Turn main power switch OFF.
3. Disconnect cable from ADM then remove shroud.
4. Remove air tube (36) from relief valve. Pull the air tube through the metal shroud (27).
5. Remove nuts (3) then remove metal shroud (27). See FIG. 37, page 66.
6. Remove fabric melter insulator (53).
7. Loosen screw (AA) then remove sensor (125).
8. Remove electrical enclosure access door (10).
9. Disconnect the temperature sensor cable from MZLP connector labeled J5. See FIG. 40.

This connector also includes the over-temperature switch wires.

10. Disconnect wire connectors from over-temperature switch (251). See FIG. 41 on page 70.
11. Pull cable out of the electrical enclosure then discard sensor (125) and wires.

**Reassembly (see FIG. 40):**

1. Route new harness wires through grommet (63) in the top of the electrical enclosure.
2. Connect wire connectors to over-temperature switch (251). See FIG. 41 on page 70.
3. Place band heater temperature sensor (125) in melter.
4. Tighten screw (AA).

Screw should lightly squeeze the temperature sensor to hold it in place. It should not bend the sensor.

5. Connect new harness to MZLP connector labeled J5.
6. Install electrical enclosure access door (10). See FIG. 39 on page 68.
7. Install fabric melter insulator (53).
8. Use nuts (3) to install metal shroud (27). See FIG. 37, page 66.
9. Route relief valve air tube through the metal shroud then attach to the relief valve.
10. Feed ADM cable through shroud then install shroud and connect cable to ADM.

11. Turn main power switch ON.
12. Open system air inlet ball valve.

### Replace Heater Over-Temperature Switch



**DANGER**
**SEVERE ELECTRIC SHOCK HAZARD**
This equipment can be powered by more than 240 V. Contact with this voltage will cause death or serious injury. Turn off and disconnect all power before disconnecting any cables and before servicing equipment.



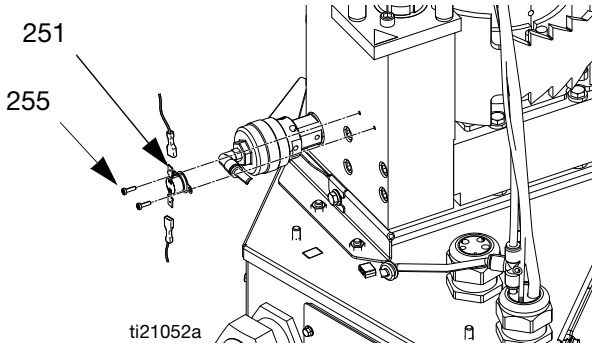


**FIG. 41**

**Disassembly (see FIG. 41):**

1. Close the bleed-type ball valve installed at the system air inlet to relieve all air pressure in the system.
2. Turn main power switch OFF.
3. Disconnect cable from ADM then remove shroud.
4. Remove air tube (36) from relief valve. Pull the air tube through the metal shroud (27). See FIG. 43, page 72.
5. Use 7/16 in. socket to remove nuts (3) then remove metal shroud (27).
6. Disconnect the wire connectors from the over-temperature switch (251).
7. Remove the screws (255) securing the over-temperature switch (251) to the melter assembly (5), then remove the switch.

**Re-assembly (see FIG. 41):**

1. Use the two screws (255) to secure the new over-temperature switch (251) to the melter.
2. Connect wire connectors to new over-temperature switch.
3. Use 7/16 in. socket to install nuts (3) to secure metal shroud (27).
4. Route relief valve air tube (36) through the metal shroud then attach to the relief valve.
5. Feed ADM cable through shroud then install shroud and connect cable to ADM.
6. Open system air inlet ball valve.
7. Turn main power switch ON.

### Replace Heater Rod

**DANGER**

**SEVERE ELECTRIC SHOCK HAZARD**

This equipment can be powered by more than 240 V. Contact with this voltage will cause death or serious injury. Turn off and disconnect all power before disconnecting any cables and before servicing equipment.

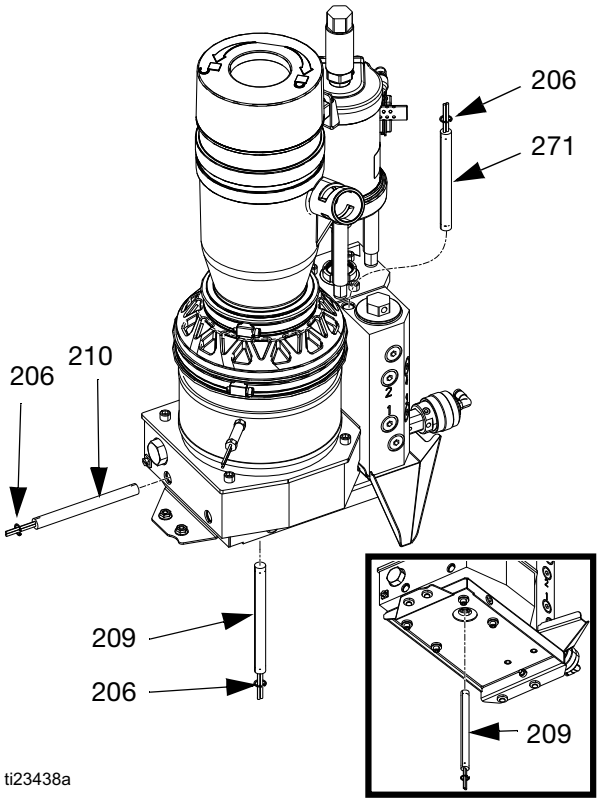


**FIG. 42**

### Disassembly (see FIG. 42):

This procedure is for replacing any of the above heater rods.

1. Turn main power switch OFF.
2. *If replacing the melter heater rod (209),* **Remove Melter Assembly**. See page 66.
3. Disconnect cable from ADM then remove shroud (29).
4. *If removing the pump heater rod (271)*:
   a. Remove the air tube (36) from the relief valve (245). Pull the air tube through the metal shroud (27).
   b. Remove nuts (3) then remove shroud (27).
5. Remove electrical enclosure front access door (10). See FIG. 39, page 68.
6. Disconnect heater rod wires from terminal blocks described in the following table.

| Item | Wire Marking 1 | Wire Marking 2 |
|---|---|---|
| Band Heater (208) | J4-1 | J4-2 |
| Melter Heater Rod (209) | J4-5 | J4-6 |
| Base Heater Rod (210) | J4-7 | J4-8 |
| Pump Heater Rod (271) | J4-3 | J4-4 |

7. Pull heater rod wires up through the grommet in the top of the electrical enclosure (1).
8. Remove heater rod retaining ring (206) then remove and discard heater rod (209, 210, 271).

### Reassembly (see FIG. 42):

1. Route new heater rod cable through grommet (63) in top of electrical enclosure then connect new heater rod wires to terminal blocks as described in the previous table.

**NOTICE**

To prevent damaging the heater rod, do not use thermal grease in the following step.

2. Install heater rod then install heater rod retaining ring (206). See FIG. 42.
3. Install electrical enclosure access door (10). See FIG. 39, page 68.
4. *If replacing the melter heater rod (209),* **Install Melter Assembly**. See page 66.
5. *If replacing pump heater rod (271),* feed ADM cable through shroud then install shroud and connect cable to ADM.
6. *If installing the pump heater rod (250),* install the metal shroud (27):
   a. Place metal shroud on system.
   b. Install and tighten nuts (3).

c. Pull the air tube through the metal shroud (27) then connect the air tube (36) to the relief valve (245).

7. Feed ADM cable through plastic shroud then install plastic shroud and connect cable to ADM.

### Replace Fluid Pressure Relief Valve



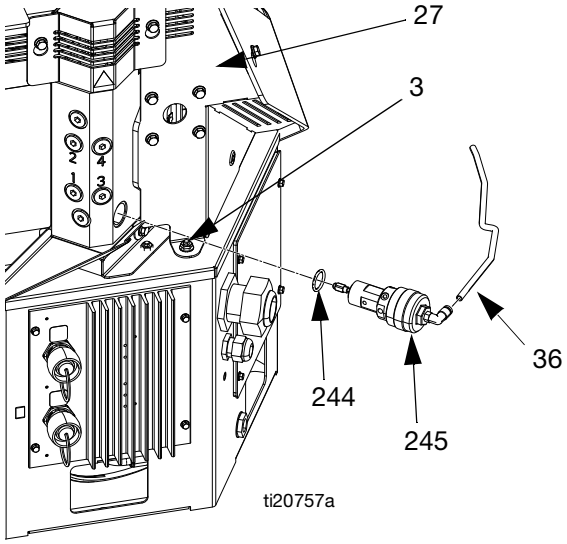


**FIG. 43**

1. **Drain the System**. See page 38.

2. Close the system air inlet ball valve.

3. Turn main power switch OFF.

4. Remove the air tube (36) from the relief valve (245). Pull the air tube through the metal shroud (27). See FIG. 43.

5. Remove nuts (3) then remove shroud (27).

6. Use crescent wrench to remove melter fluid pressure relief valve (245). See FIG. 43.

7. Use an o-ring pick to remove o-ring (244).

8. Install o-ring (244) into manifold.

**NOTICE**

To prevent damage to o-ring, ensure o-ring is seated properly prior to moving to next step.

9. Thread new fluid pressure relief valve (245) into manifold. See FIG. 43. Once hand-tight, use crescent wrench to tighten.

10. Use nuts (3) to install metal shroud.

11. Connect air tube to pressure relief valve.

12. Feed ADM cable through plastic shroud then install shroud and connect cable to ADM.

# Multi-Zone Low Power Temperature Control Module (MZLP)

### Replace MZLP Fuse



**DANGER**

**SEVERE ELECTRIC SHOCK HAZARD**

This equipment can be powered by more than 240 V. Contact with this voltage will cause death or serious injury. Turn off and disconnect all power before disconnecting any cables and before servicing equipment.



### MZLP Identification

| Key | 24V510 |
|---|---|
| |   |
| **A** | F1 and F2 fuses are physically larger than F3-F10 |
| **B** | Yellow sticker on relay |
| **C** | Marked 24V133 |

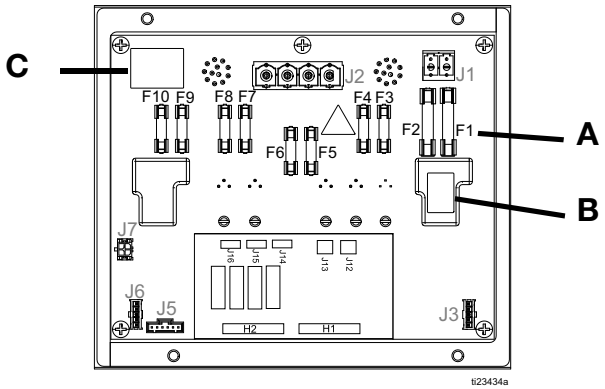


**FIG. 44: MZLP ID and Fuse Locations**

**NOTICE**

To prevent system damage, always use fast acting fuses. Fast acting fuses are required for short-circuit protection.

| Fuse | Part |
|---|---|
| 24V510 MZLP Fuses | |
| F1, F2 | 250VAC, 25A, fast acting, white, 0.25 in x 1.2 in |
| F3-F10 | 250VAC, 8A, fast acting |

### Fuse Kits

| Kit | MZLP | Description |
|---|---|---|
| **24V289** | **24V510** | Includes standard clear fuses. |
| **24X480** | | Includes ceramic fuses used for food industries. |

1. Turn main power switch OFF.
2. Remove electrical enclosure front access door (10).
3. Use a proper non-conductive fuse puller tool to remove the blown fuse.

**NOTICE**

Using an improper tool, such as screw drivers or pliers may break glass on fuse.

F1 and F2 are white ceramic and indicate 25A on the barrel.

F3-F10 are clear glass and indicate 8A on the barrel.

4. Install electrical enclosure front access door (10).

### Replace MZLP



**DANGER**
**SEVERE ELECTRIC SHOCK HAZARD**
This equipment can be powered by more than 240 V. Contact with this voltage will cause death or serious injury. Turn off and disconnect all power before disconnecting any cables and before servicing equipment.



**Disassembly:**

1. Turn main power switch OFF.
2. Remove electrical enclosure front access door (10).
3. Disconnect heated hose electrical connectors from outside of MZLP (112).
4. Note location of each cable, then unplug all cables from the MZLP (112) that will be replaced. See FIG. 45.
5. Remove four screws (114) securing MZLP (112) to electrical enclosure (1) then carefully remove MZLP from electrical enclosure. See FIG. 45.

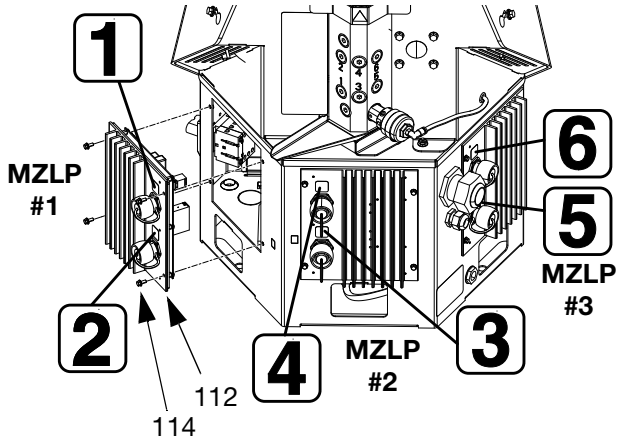


**FIG. 45**

6. Replace MZLP. See FIG. 45 for MZLP #1, MZLP #2, and MZLP #3 identification.
   a. To replace MZLP #1, remove the daughter card and standoffs, and re-install them on the new MZLP #1.
   b. To replace MZLP #3, remove the jumper (135) from MZLP #3 J5 connector and reinstall it on the new MZLP #3 J5 connector.

**Reassembly:**

1. Set MZLP rotary switch to “1” on MZLP with daughter card. Set MZLP rotary switch to “2” or “3” on MZLP without daughter card, based on location. See FIG. 46 for rotary switch location.
2. Apply channel label stickers to new MZLP. See FIG. 45.
3. Use four screws (114) to install MZLP (112) to electrical enclosure (1).
4. Reconnect cables to MZLP (112).

Do not force the electrical connection. Minimal force is required to seat the connector. If resistance is felt, stop and verify the connector orientation.

If unable to determine connector location, see **Electrical Schematics** on page 85.

5. Install electrical enclosure front access door (10).
6. Connect heated hose electrical connectors to new MZLP.

MZLP may need updated software. See **Software Update Procedure** on page 84.

### Replace MZLP Daughter Card



**DANGER**

**SEVERE ELECTRIC SHOCK HAZARD**

This equipment can be powered by more than 240 V. Contact with this voltage will cause death or serious injury. Turn off and disconnect all power before disconnecting any cables and before servicing equipment.



**Disassembly:**

1. Turn main power switch OFF.
2. Remove electrical enclosure front access door (10).
3. Note location of each cable then unplug all cables from MZLP daughter card (112a).
4. Remove four mounting screws (112b) from daughter card (112a) and set aside.

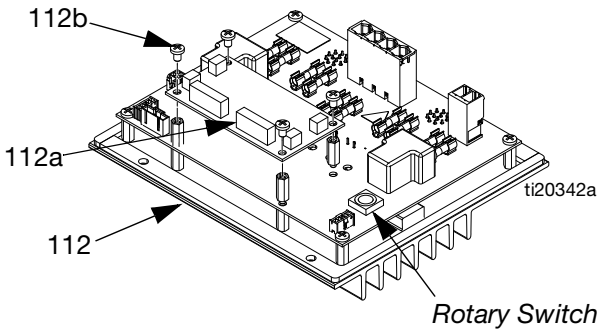


**FIG. 46**

5. Unplug daughter card (112a) from the MZLP #1 (112).

**Reassembly:**

1. Plug new daughter card (112a) into the MZLP (112).
2. Use screws (112b) to secure daughter card to MZLP (112).
3. Connect cables to new daughter card (112a).

Do not force the electrical connection. Minimal force is required to seat the connector. If resistance is felt, stop and verify the connector orientation.

If unable to determine connector location, see **Electrical Schematics** on page 85.

4. Install electrical enclosure front access door (10).

# System

### Replace Fill Sensor

**DANGER**
**SEVERE ELECTRIC SHOCK HAZARD**
This equipment can be powered by more than 240 V. Contact with this voltage will cause death or serious injury. Turn off and disconnect all power before disconnecting any cables and before servicing equipment.

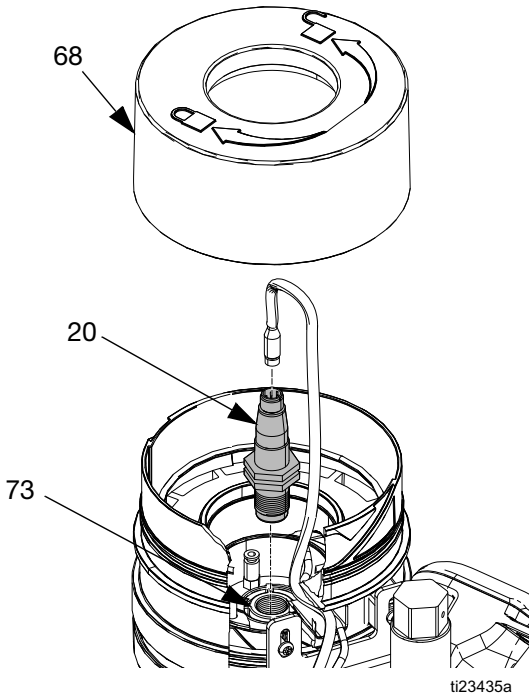


**FIG. 47**

**Disassembly (see FIG. 47):**

1. Turn main power switch OFF.
2. Remove filter cover (68) and filter element.
3. Gently pull up on cable while unscrewing fill sensor connector then remove fill sensor cable from fill sensor (20).
4. Loosen fill sensor jam nut then remove fill sensor (20) from sensor housing (73).

**Reassembly (see FIG. 47):**

1. Thread new fill sensor (20) into sensor housing (73). Bottom out the sensor in the sensor housing then back out 1/2 turn.
2. Tighten jam nut on fill sensor (20).
3. Connect fill sensor cable to new fill sensor (20).
4. Replace filter element and cover (68).

### Replace ADM

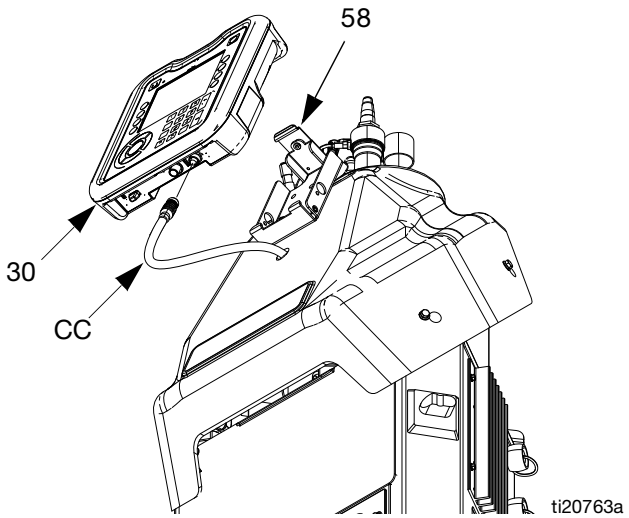


**FIG. 48**

1. Turn main power switch OFF.
2. Disconnect cable (CC) from bottom of ADM (30). See FIG. 48.
3. Remove ADM from bracket (58).
4. Install new ADM into bracket.
5. Connect cable to bottom of new ADM.

ADM may need updated software. See **Software Update Procedure** on page 84.

### Replace AWB



**DANGER**

**SEVERE ELECTRIC SHOCK HAZARD**

This equipment can be powered by more than 240 V. Contact with this voltage will cause death or serious injury. Turn off and disconnect all power before disconnecting any cables and before servicing equipment.



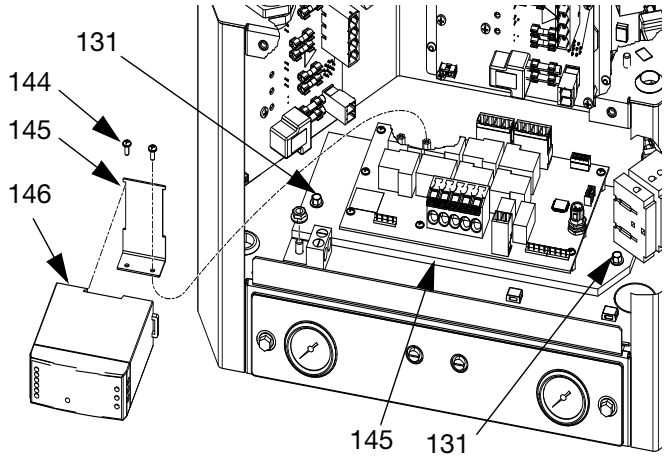


**FIG. 49: AWB and Power Supply**

*Disassembly:*

1. Turn main power switch OFF.
2. Note location of each cable, then unplug all cables from the AWB. See **Electrical Schematics**, page 85.
3. Remove 2 screws (131) securing AWB (143) to electrical enclosure (1) then carefully remove AWB.
4. Remove power supply (146) from power supply bracket (145) by releasing mounting tab on the side of the power supply. See FIG. 49.
5. Remove two screws (144) securing power supply bracket (145) to AWB (143) and remove power supply bracket. See FIG. 49.

*Reassembly:*

1. Use two screws (144) to secure power supply bracket (145) to new AWB (143). See FIG. 49.
2. Mount power supply (146) to power supply bracket (145). See FIG. 49.
3. Connect connector (labeled AWB-J1) on power supply harness (147) to J1 on AWB (143). See **Electrical Schematics**, page 85.
4. Use two screws (131) to install AWB (143) to electrical enclosure (1). See FIG. 49.
5. Reconnect cables to AWB (143).

Do not force the electrical connection. Minimal force is required to seat the connector. If resistance is felt, stop and verify the connector orientation.

If unable to determine the connector location, see **Electrical Schematics**, page 85.

6. Install electrical enclosure front access door (10).

### Replace Power Supply



**DANGER**

**SEVERE ELECTRIC SHOCK HAZARD**

This equipment can be powered by more than 240 V. Contact with this voltage will cause death or serious injury. Turn off and disconnect all power before disconnecting any cables and before servicing equipment.

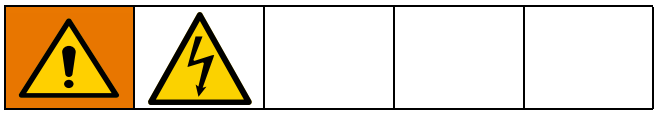

*Disassembly:*

1. Turn main power switch OFF.
2. Remove electrical enclosure front access door (10).

4. Disconnect screw terminal connections between power supply (146) and power supply harness (147) according to the following table. See FIG. 49.

| Power Supply Connection | Harness Label |
|---|---|
| V+ | V+ |
| V- | V- |
| GND | GND |
| L | L |
| N | N |

*Reassembly:*

1. Make connections between power supply harness (147) and new power supply (146) according to the following table:

2. Reattach power supply (146) to power supply bracket (145). See FIG. 49.

3. Install electrical enclosure front access door (10).

**Replace Power Supply Harness**



**DANGER**

**SEVERE ELECTRIC SHOCK HAZARD**

This equipment can be powered by more than 240 V. Contact with this voltage will cause death or serious injury. Turn off and disconnect all power before disconnecting any cables and before servicing equipment.



*Disassembly:*

1. Turn main power switch OFF.

2. Remove electrical enclosure front access door (10).

3. Disconnect screw terminal connections between power supply (146) and power supply harness (147) according to the following table.

| Power Supply Connection | Harness Label |
|---|---|
| V+ | V+ |
| V- | V- |
| GND | GND |
| L | L |
| N | N |

4. Unplug power supply harness (147) from J1 on AWB (143). See **Electrical Schematics**, page 85.

*Reassembly:*

1. Make connections between power supply harness (147) and new power supply (146).

2. Connect connector (labeled AWB-J1) on power supply harness (147) to J1 on AWB (143). See **Electrical Schematics**, page 85.

3. Install electrical enclosure front access door (10).

# Air Controls

**DANGER**
**SEVERE ELECTRIC SHOCK HAZARD**
This equipment can be powered by more than 240 V. Contact with this voltage will cause death or serious injury. Turn off and disconnect all power before disconnecting any cables and before servicing equipment.

### Replace Air Control Solenoids

**NOTE:** In order to replace the air control solenoids, the system must be tipped back to access underneath the electrical enclosure.

**Disassembly (see FIG. 50):**

1. Turn main power switch OFF.
2. Disconnect plug from power outlet or turn off circuit breaker for incoming power.
3. Close the bleed-type ball valve installed at the system air inlet to relieve all air pressure in the system.
4. Remove front access panel (10) from electrical enclosure (1).
5. Remove the transformer assembly; for 480V systems only *(see FIG. 51)*:
   a. Disconnect transformer wires from J2 connector on AWB board and the main power switch.
   b. Remove three screws (142) and InvisiPac system off of transformer assembly (140).
6. Use 3/8 in. socket to remove two screws (8).
7. Note location of each air line connection.
8. Insert hands through access holes (FF), see FIG. 50, in bottom of electrical enclosure then disconnect air lines from air control solenoids (402).
9. Disconnect air control solenoids cable from MZLP daughter board connector J13. Pull wire out of the electrical enclosure.
10. Remove two screws (405) securing solenoids (402) to air control assembly (9) then remove air control solenoids.

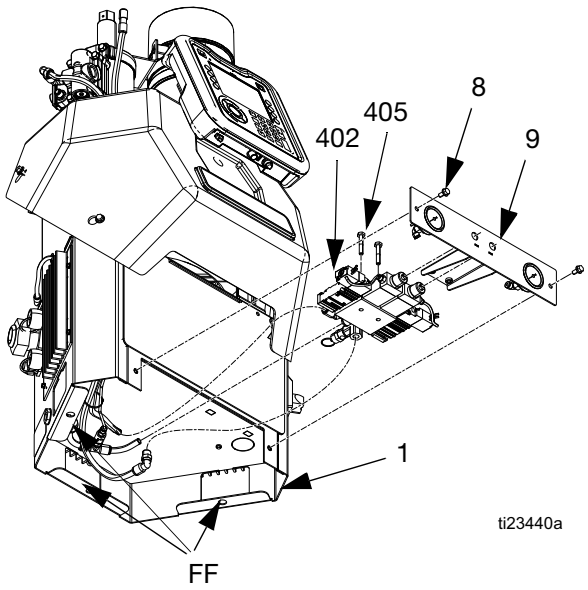


**FIG. 50**

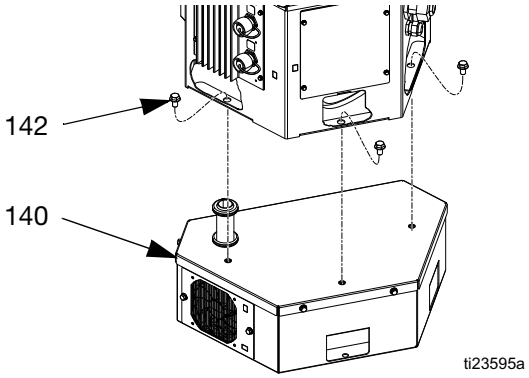


**FIG. 51**

**Reassembly (see FIG. 50):**

1. Use two screws (405) to secure new solenoids (402) to air control assembly (409).
2. Feed the new solenoid cable into the electrical enclosure and attach cable to MZLP daughter board connector J13.
3. Insert hands through access holes (FF), see FIG. 50, in bottom of electrical enclosure then connect air lines to air control solenoids (402).
4. Slide air control assembly (9) into place then use two screws (8) to secure to electrical enclosure (1).

5. For 480V systems, install transformer assembly (140) with screws (142) and reconnect transformer wires to J2 connector on AWB board and the main power switch.

6. Install electrical enclosure front access door.

### Replace Air Control Gauge

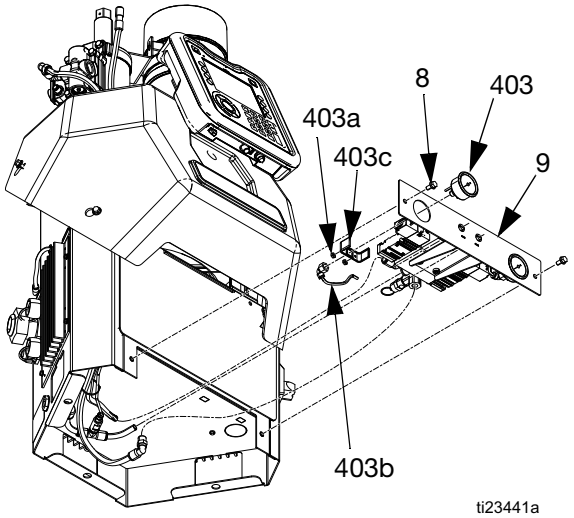


**FIG. 52**

**Disassembly (see FIG. 52):**

1. Turn main power switch OFF.

2. Close the bleed-type ball valve installed at the system air inlet to relieve all air pressure in the system.

3. Remove two screws (8) then slide air control assembly (9) out from electrical enclosure (1) so the back of the gauges are exposed.

4. Remove two nuts (403a) securing gauge (403) in place then remove bracket (403c).

5. Place one small crescent wrench on the brass part of the gauge then use a second small crescent wrench to remove the air fitting (403b).

6. Remove air gauge from panel.

**Reassembly (see FIG. 52):**

1. Slide new air gauge into panel and slide the bracket onto the back of the gauge. Install air fitting onto the gauge by hand, do not tighten yet.

2. Install bracket (403c) then install two nuts (403a) finger tight.

3. Place one small crescent wrench on the brass part of the gauge then use a second small crescent wrench to tighten the air fitting (403b).

**NOTICE**

In the following step, do not overtighten the two nuts (403a). Overtightening may cause the gauge to break.

4. Orient gauge as desired then tighten two nuts (403a) to secure gauge (403) in place.

5. Slide air control assembly (9) into place then use two screws (8) secure to electrical enclosure.

## Air Motor

### Replace Pilot Valve

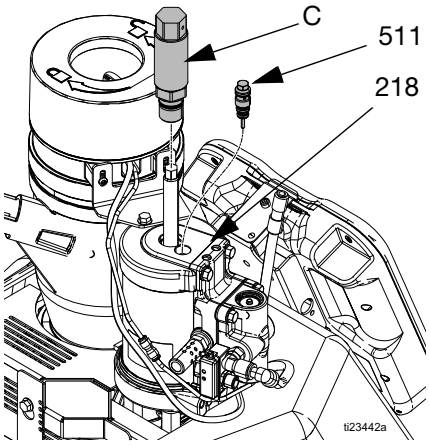


**FIG. 53: Top Pilot Valve**

1. Close the bleed-type ball valve installed at the system air inlet to relieve all air pressure in the system.

2. Turn main power switch OFF.

3. Replace top pilot valve (511):

   a. Use crescent wrench to remove rod cover (C).

   b. Use 10 mm socket to remove air motor pilot valve (511) from air motor (218).

   c. Lubricate with grease and install new air motor pilot valve (511).

   d. Torque pilot valve to 95-105 in-lb (10.7-11.9 N•m).

4. Replace bottom pilot valve (511):

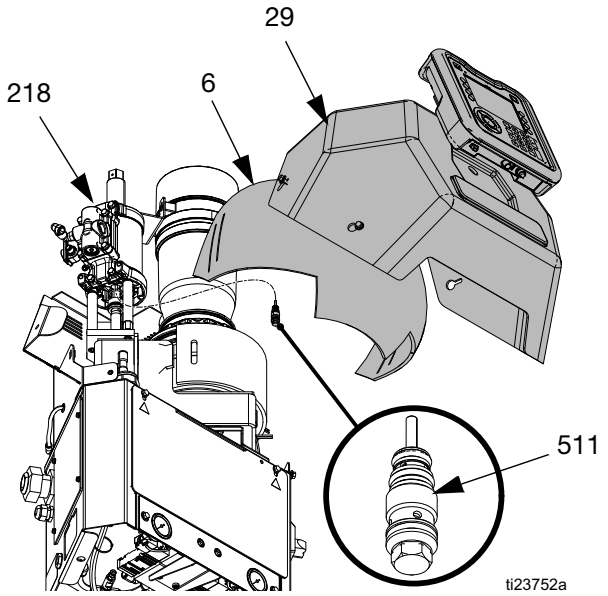


**FIG. 54: Bottom Pilot Valve**

a. Remove cover (29) and insulation (6).

b. Use 10 mm socket to remove air motor pilot valve (511) from air motor (218).

c. Lubricate with grease and install new air motor pilot valve (511).

d. Torque pilot valve to 95-105 in-lb (10.7-11.9 N•m).

e. Replace insulation (6) and cover (29).

### Replace Air Valve

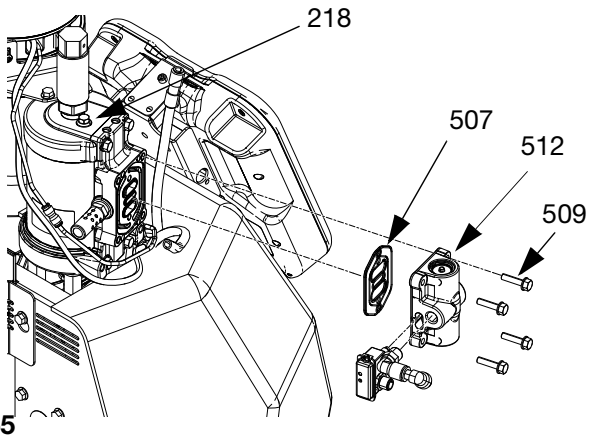


**FIG. 55**

**Disassembly (see FIG. 55):**

1. Close the bleed-type ball valve installed at the system air inlet to relieve all air pressure in the system.
2. Turn main power switch OFF.
3. Loosen clamp on air motor bracket (528) then remove funnel assembly (61).
4. Loosen upper hose clamp on rubber housing then remove fill cap.
5. Dispense until the fluid level in the melter is at or below the honeycomb grid.

If a screw or air valve seal is dropped during this procedure it could fall into the melter. Melter fluid level must be below honeycomb grid before moving to next step.

6. Once the fluid level is low enough, close the bleed-type ball valve installed at the system air inlet.
7. Disconnect air hose and cable from the air motor.
8. Use 10 mm socket to remove four screws (509) securing air valve (512) to air motor (218).
9. Remove air valve (512) and seal (507) then discard.

**Reassembly (see FIG. 55):**

1. Lubricate with grease then place new air valve seal (507) onto air valve (512).
2. Carefully place new air valve (512) against air motor then thread in the four screws (509). Ensure the air valve seal (507) stays in place by applying constant pressure against the air motor.
3. Use 10 mm socket to torque screws (509) to 95-105 in-lb (10.7-11.9 N•m).
4. Install fill cap then tighten upper hose clamp on rubber housing.
5. Connect air hose and cable to the air motor.

### Remove Air Motor

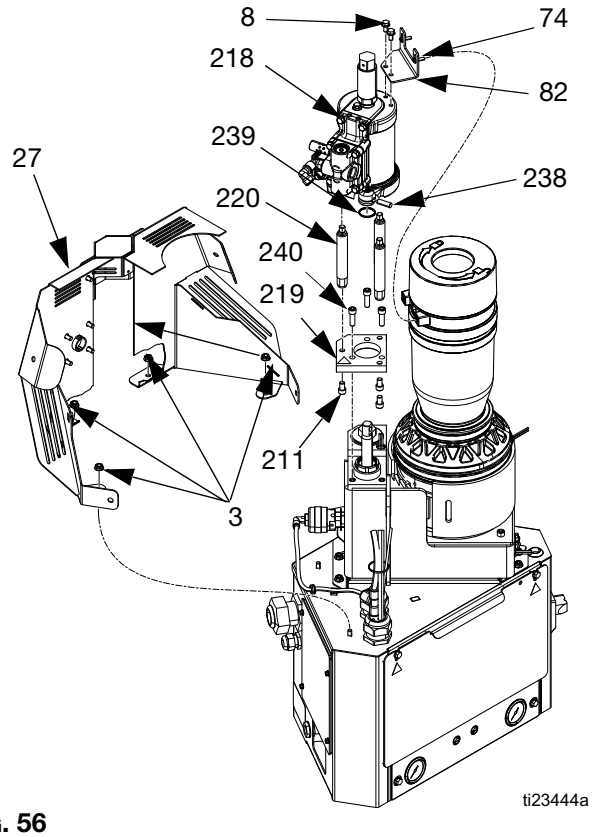


**FIG. 56**

1. Close the bleed-type ball valve installed at the system air inlet to relieve all air pressure in the system.
2. Turn main power switch OFF.
3. Disconnect air line (36) from pressure relief valve (245) then pull through metal shroud (27). See FIG. 43 on page 72.
4. Remove three nuts (3) securing metal shroud (27) in place then remove metal shroud (27).
5. Disconnect air supply line from air motor (218).
6. Remove air motor assembly:
   a. Slide retaining ring (239) down.
   b. Remove dowel pin (238).
   c. Remove three screws (240).
   d. Remove screws (8), screws (74), and bracket (82).
7. *If replacing a damaged air motor with a new fully assembled air motor:*
   a. Remove three screws (211) securing air motor tie rods (220) to base plate (219).
   b. Remove tie rods (220) from air motor (218).

### Install Air Motor

See FIG. 56.

1. If replacing a damaged air motor with a new fully assembled air motor:
   a. Install tie rods (220) onto air motor (218).
   b. Install three screws (211) securing air motor tie rods (220) to base plate (219).
2. Connect air motor assembly to system:
   a. Install three screws (240), two screws (8), screws (74), and bracket (82) to secure air motor assembly to system.
   b. Install dowel pin (238).
   c. Install retaining ring (239) over dowel pin (238).
3. Use four nuts (3) to install melter shield (27).
4. Reconnect air supply line to air motor (218).
5. Reconnect air line (36) to pressure relief valve (245). See FIG. 43 on page 72.

# Transformer Fan

**DANGER**
**SEVERE ELECTRIC SHOCK HAZARD**
This equipment can be powered by more than 240 V. Contact with this voltage will cause death or serious injury. Turn off and disconnect all power before disconnecting any cables and before servicing equipment.

### Replace Fan

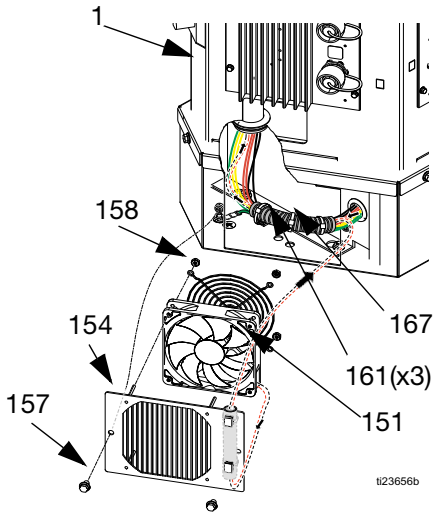


FIG. 57

1. Turn main power switch OFF.
2. Disconnect plug from power outlet or turn off circuit breaker for incoming power.
3. Remove front access panel (10) from electrical enclosure (1).
4. Remove connector from J7 connector on AWB board. Remove red (+) and black (-) wires from connector.

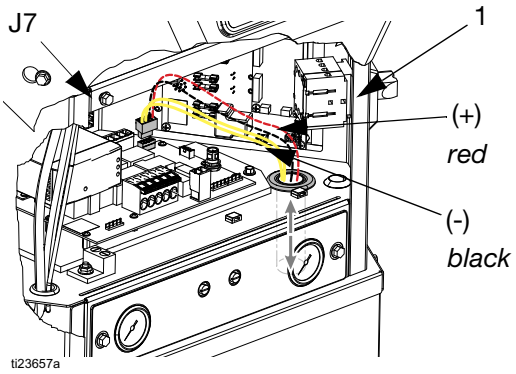


*Front access panel (10) not shown.*

FIG. 58

5. Remove screws (157) and fan grill (154). Pull two fan wires down into the transformer enclosure.
6. Cut three zip ties on corrugated tube (167) and two zip ties (161) on fan grill (154).
7. Remove four nuts (158), rear fan grill (170), and fan (155).

### Install Fan

1. Mount new fan (155), rear fan grill (170), and nuts (158) on grill (154) with the arrow pointing toward the grill (154).
2. Tie down fan wires onto tie down locations on grill (154) using cable ties (161).

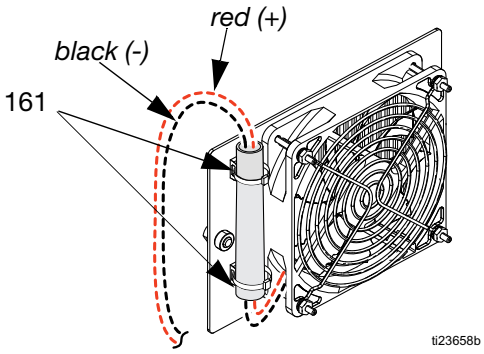


FIG. 59

3. Route fan wires with transformer wires into the electrical enclosure (1). Connect red and black fan wires to J7 connector. Reconnect J7 connector to AWB board. See FIG. 58.

4. Reinstall corrugated tube (167) on fan and transformer wires. See FIG. 57.

To prevent fan errors on ADM, remove excess slack and ensure cabling and zip ties do not contact fan blades.

5. Reinstall fan grill (154) and front access panel (10).

## Software Update Procedure

When software is updated on the ADM the software is then automatically updated on all connected GCA components. A status screen is shown while software is updating to indicate progress.

1. Turn system main power switch OFF.
2. Remove ADM from bracket.
3. Remove token access panel.

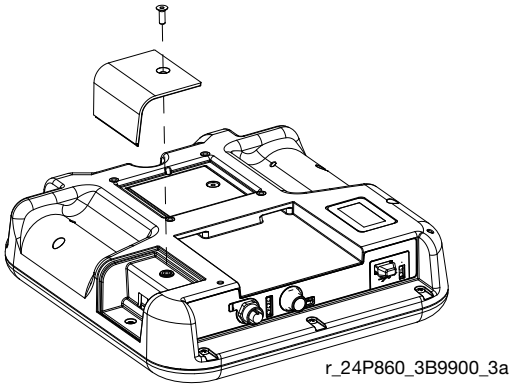


**FIG. 60: Remove Access Panel**

4. Insert and press InvisiPac software upgrade token (T, part no. 24R324) firmly into slot.

**NOTE:** There is no preferred orientation of token.

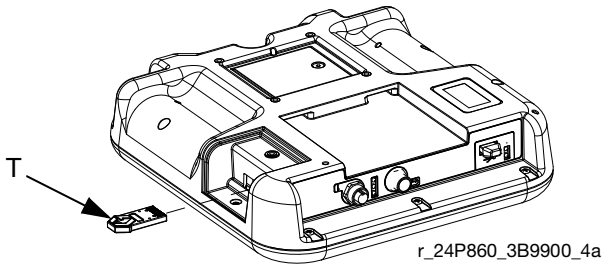


**FIG. 61: Insert Token**

5. Install ADM into bracket.
6. Turn system main power switch ON.

| NOTICE |
| --- |
| A status is shown while software is updating to indicate progress. To prevent corrupting the software load, do not remove token until the status screen disappears. |

**NOTE:** When the screen turns on, the following screens appear:

***First:***
*Software is checking which GCA modules will take the available updates.*




***Second:***
*Status of the update with approximate time until completion.*

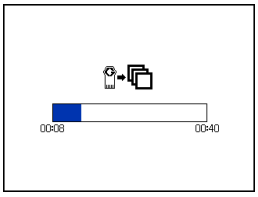


***Third:***
*Updates are complete. Icon indicates update success/failure. See the following Icon table.*

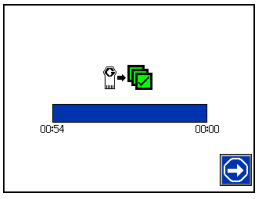


| Icon | Description |
| --- | --- |
|  | Update successful. |
|  | Update unsuccessful. |
|  | Update complete, no changes necessary. |
|  | Update was successful/complete but one or more GCA modules did not have a CAN boot loader so software was not updated on that module. |

7. Remove token (T).
8. Replace token access panel.
9. Press  to continue to InvisiPac operation screens.

10. Navigate to System screen. Verify the following pages. Reference screens on page 130.
    a. System Screen Page 1, Customer I/O is set correctly.
    b. System Screen Page 2, Channel and RTD types are set correctly.
    c. System Screen Page 3, System Type, Pump Idle Time, Power Type, Circuit Breaker Size, and Refill Settings.

# Electrical Schematics



To prevent electric shock and system damage, all electrical work must be performed by a qualified electrician.

## Incoming Power

**NOTICE**

To prevent severe system damage, ensure main power leads are installed correctly. See **Connect Electrical Cord** on page 23.

## Cable Identification

Use the table to identify cables and other system components in the electrical schematics.

| Ref | Part | Description |
|---|---|---|
| 9 | --- | Manifold, air assembly |
| 20 | 24R041 | Sensor, ultrasonic |
| 25 | 24R885 | Switch, reed assembly |
| 30 | 24P860 | ADM |
| 86 | 127666 | Cable, Extension |
| 87 | --- | WIRE, ground |
| 90 | --- | Plug, Phoenix, 8pin |
| 103 | --- | Harness, MZLP #1 AWB |
| 112 | 24V288 | Module, MZLP with daughter board |
| 118 | 24V510 | Module, MZLP |
| 121 | 16T087 | Cable Board |
| 123 | 127768 | Cable, CAN, |
| 124 | 16T103 | Cable Pump |
| 125 | 24R040 | Sensor, RTD, 1M Harness |
| 126 | 16T108 | Cable Ultrasonic |
| 129 | --- | Harness, MZLP 2, AWB |
| | --- | Harness, MZLP 2/3, AWB |
| 135 | 16W035 | Connector Jumper |
| 136 | --- | Harness, MZLP #1 AWB |
| 138 | --- | Harness, Disc AWB |
| 140 | --- | Transformer |
| 143 | 24V816 | AWB |
| 146 | 126453 | Power Supply |
| 147 | --- | Harness Power Supply AWB |
| 148 | --- | Cable, Board, Samtec |
| 181 | 24X521 | Module, PC-8 Internal |
| 182 | 128180 | Power Supply, 120W |
| 184 | 128183 | Harness, Power, PC-8 |
| 185 | 128182 | Cable, Communication |
| 208 | 24V522 | Band heater, HM50 |
| | 24R039 | Band heater, HM25 |
| 209 | 25M208 | Heater Rod (1500 W), HM50, Melt |
| | 24R034 | Heater Rod (500 W), HM25, Melt |
| 210 | 25C445 | Heater Rod (1000 W), HM50, Base |
| | 25C448 | Heater Rod (1500 W), HM25, Base |
| 271 | 25C446 | Heater Rod (1000 W), HM50, Pump |
| | 25C447 | Heater Rod (1500 W), HM25, Pump |
| 251 | 126780 | SWITCH, OT |
| 1201 | 16T102 | Light Tower |

# Systems Without Internal Pattern Controller

Review Connect Electrical
Cord section, Figure 16

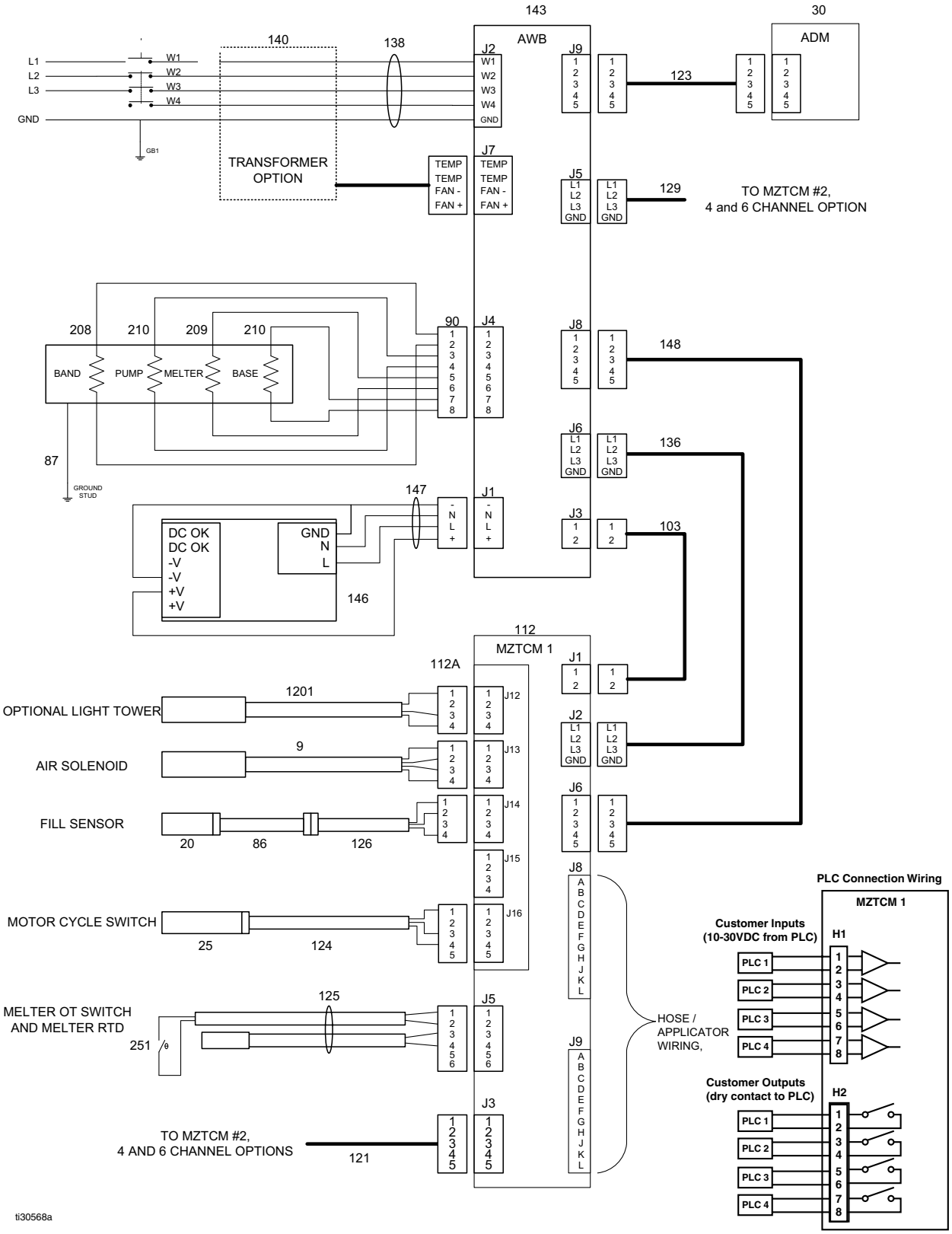

# Systems With Internal Pattern Controller

Review Connect Electrical Cord section, Figure 16

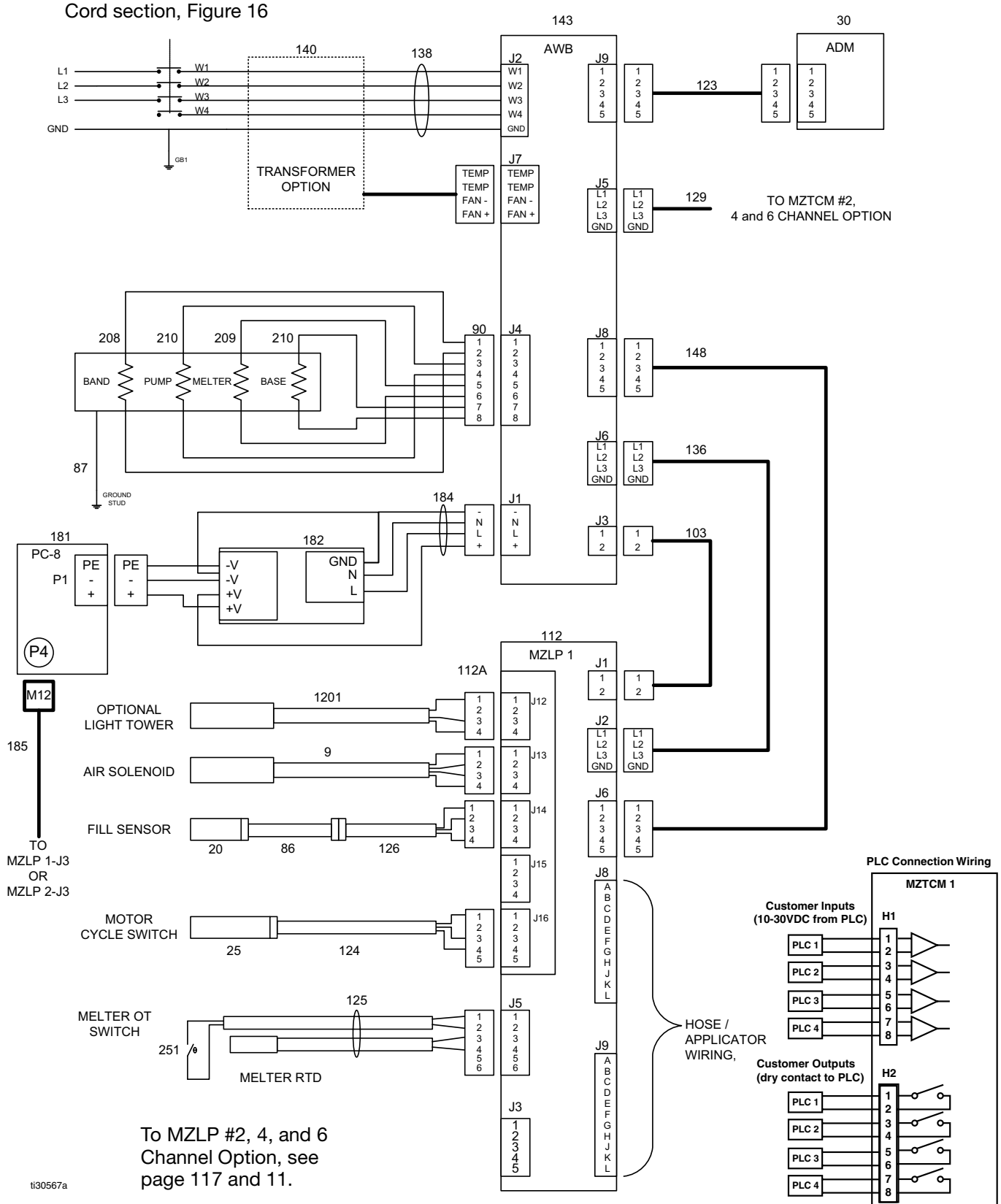


To MZLP #2, 4, and 6 Channel Option, see page 117 and 11.

To MZLP #2 or Pattern Control Board, see page 88.

ti30567a

# 400 VAC Transformer Option

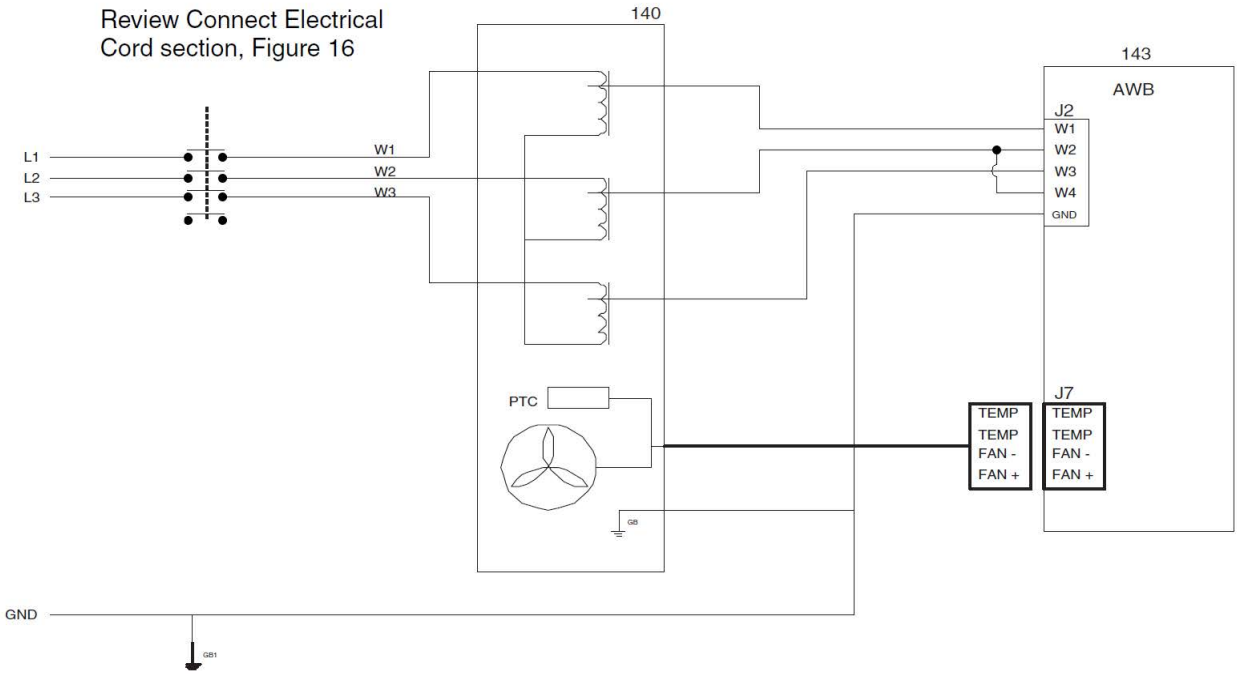


# 480 VAC Transformer Option

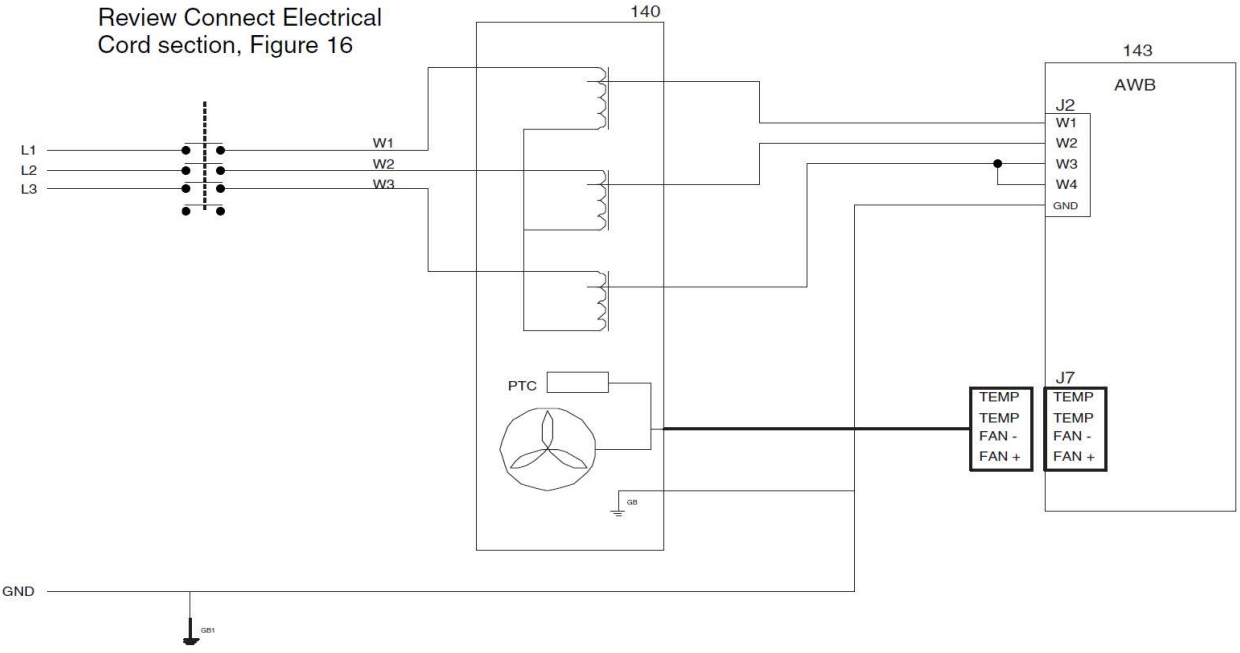

# Typical Hose / Applicator Wiring

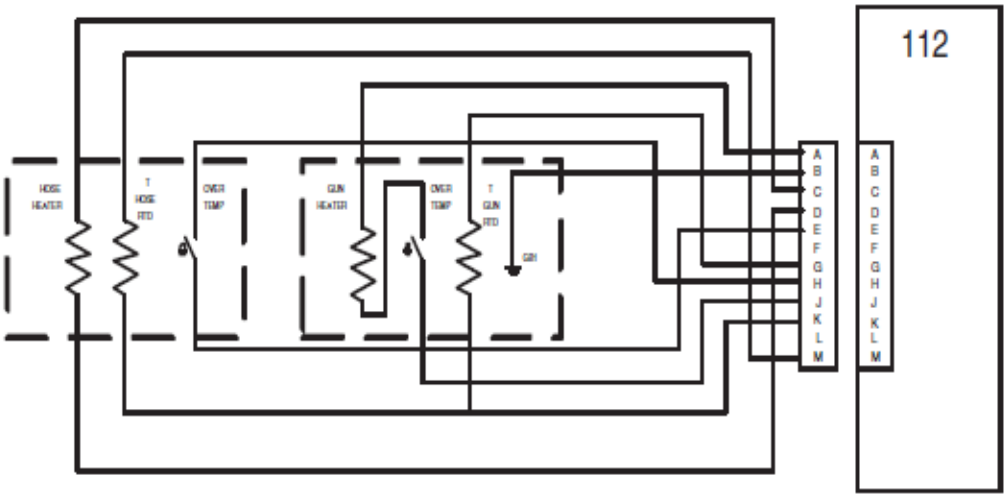

# 2nd and 3rd MZLP Options

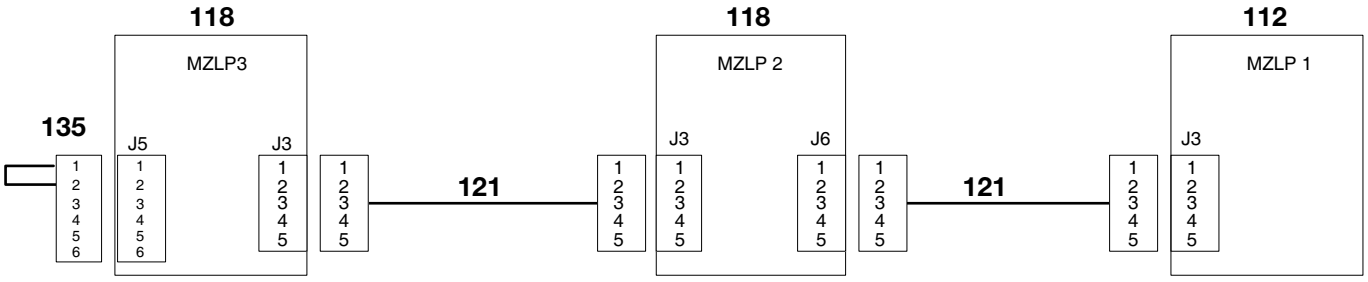


# Internal PC-8 Options

One MZLP

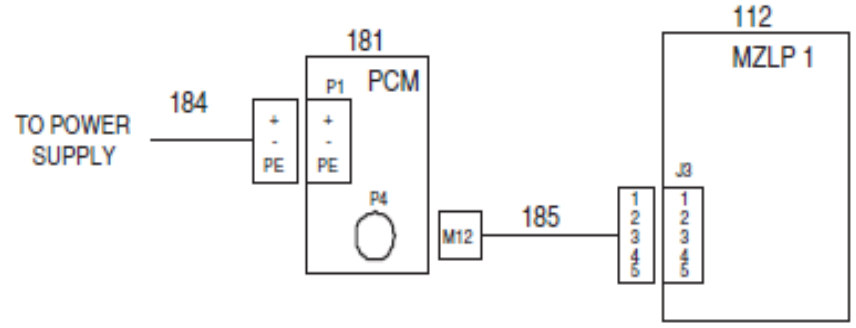


Two MZLPs

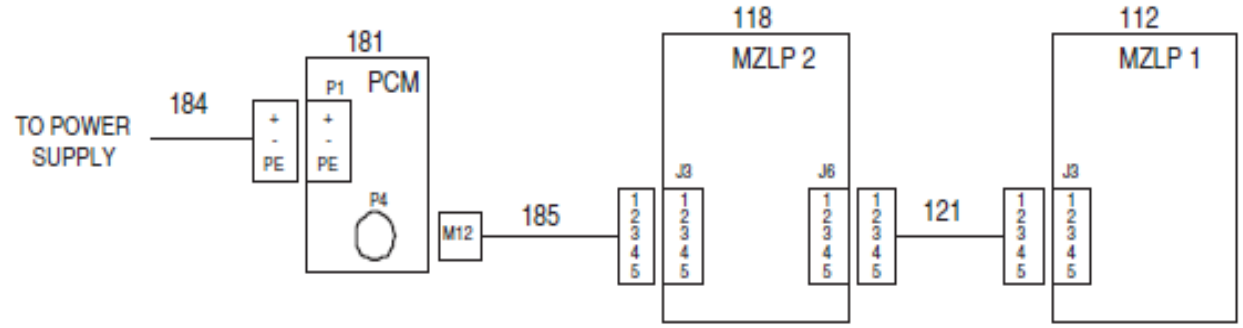

# Air Schematic

Install an optional ramp up/down controller to limit air to the air motor and slow down the system dispense rate.

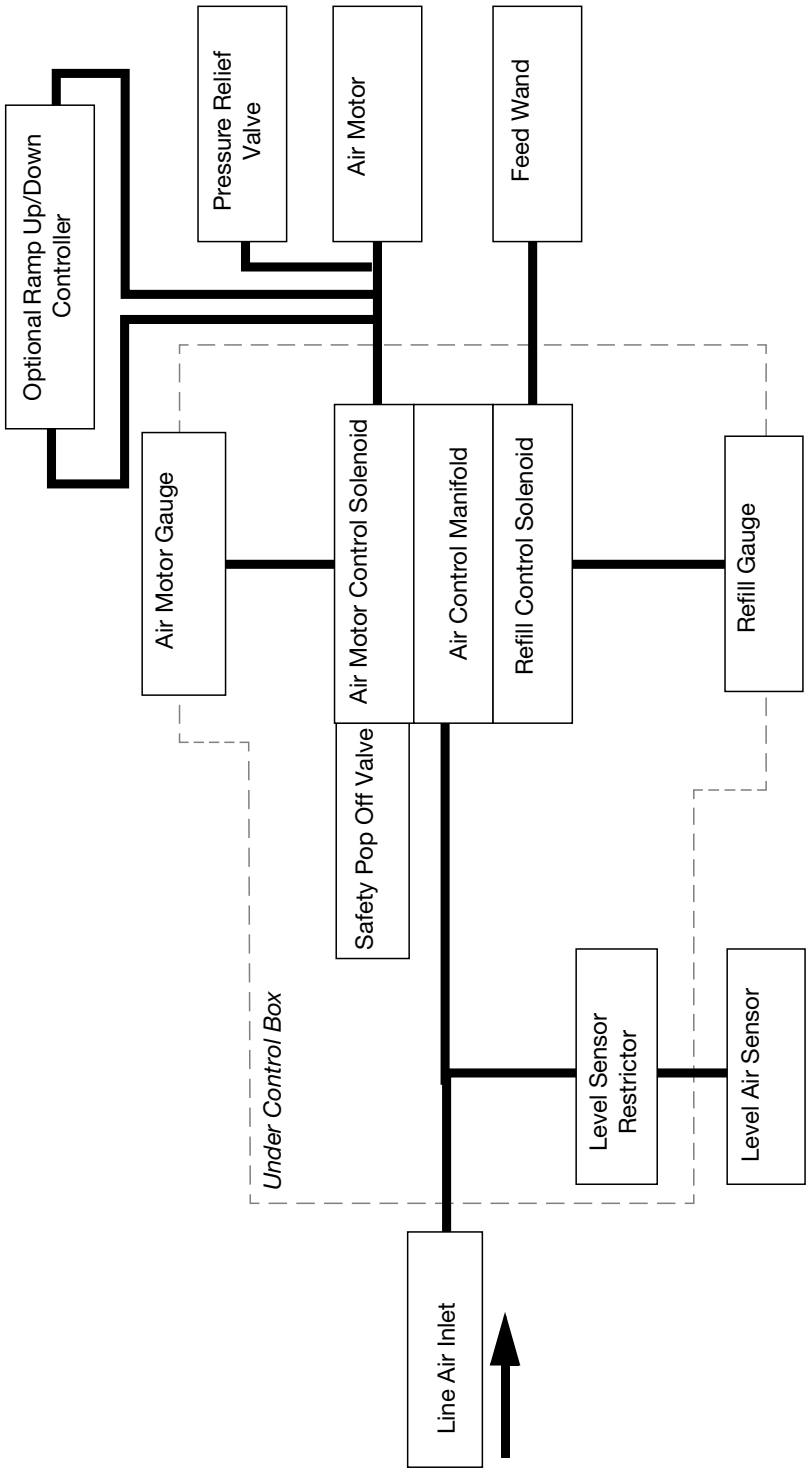

# Parts

## InvisiPac Systems

### System Parts, Page 1 of 3

1. Apply door gaskets (11) to door (10) per layout diagram.
2. Apply pipe sealant to all non-swiveling pipe threads.
3. Bottom sensor (20) out then back off 1/2 turn.
4. Lubricate all seals and o-rings with water resistant grease.
5. Torque to 5-11 ft-lb (7-15 N•m).
6. Torque to 8-10 in-lb (0.9-1.1 N•m).

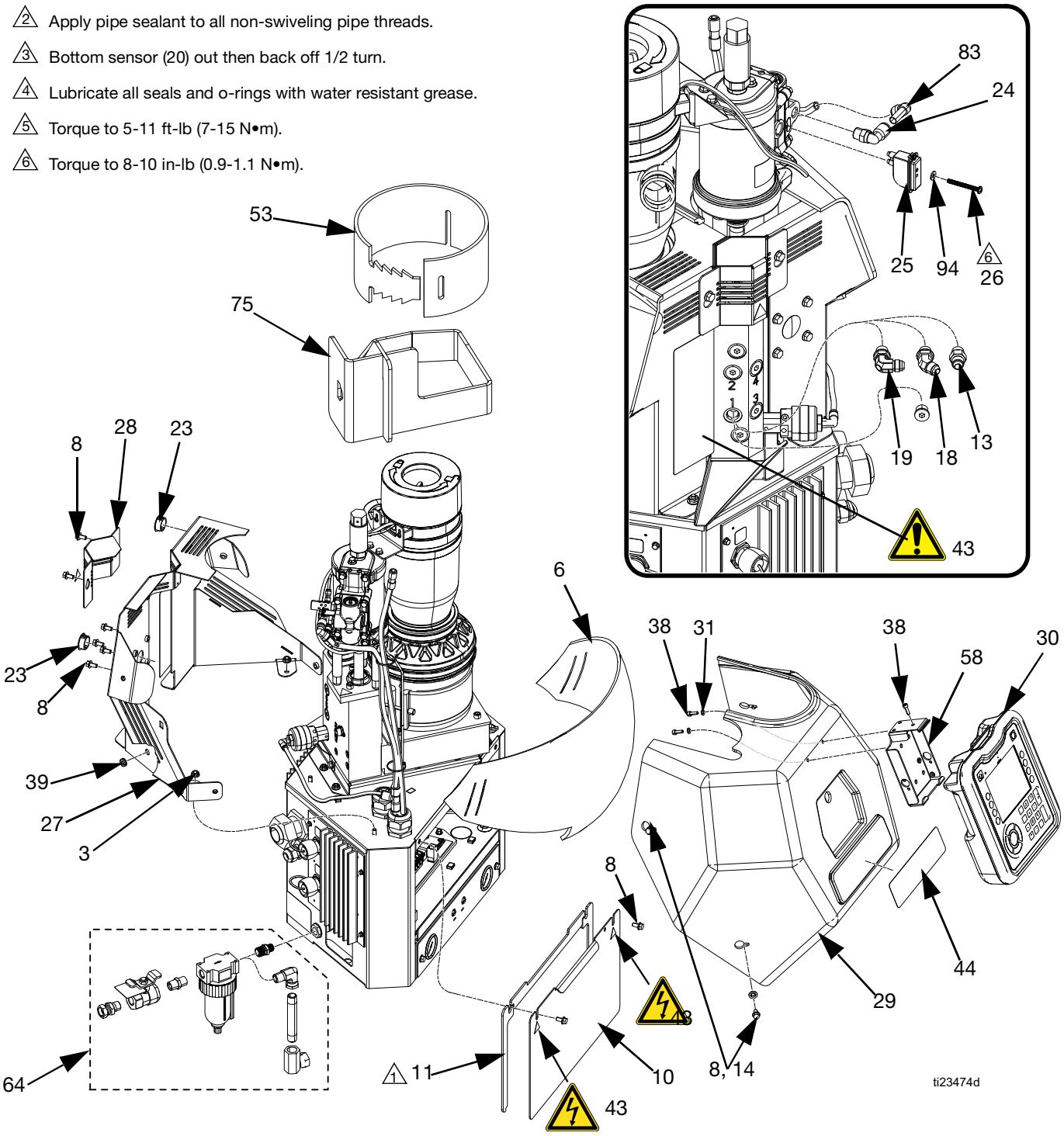

**System Parts, Page 2 of 3**

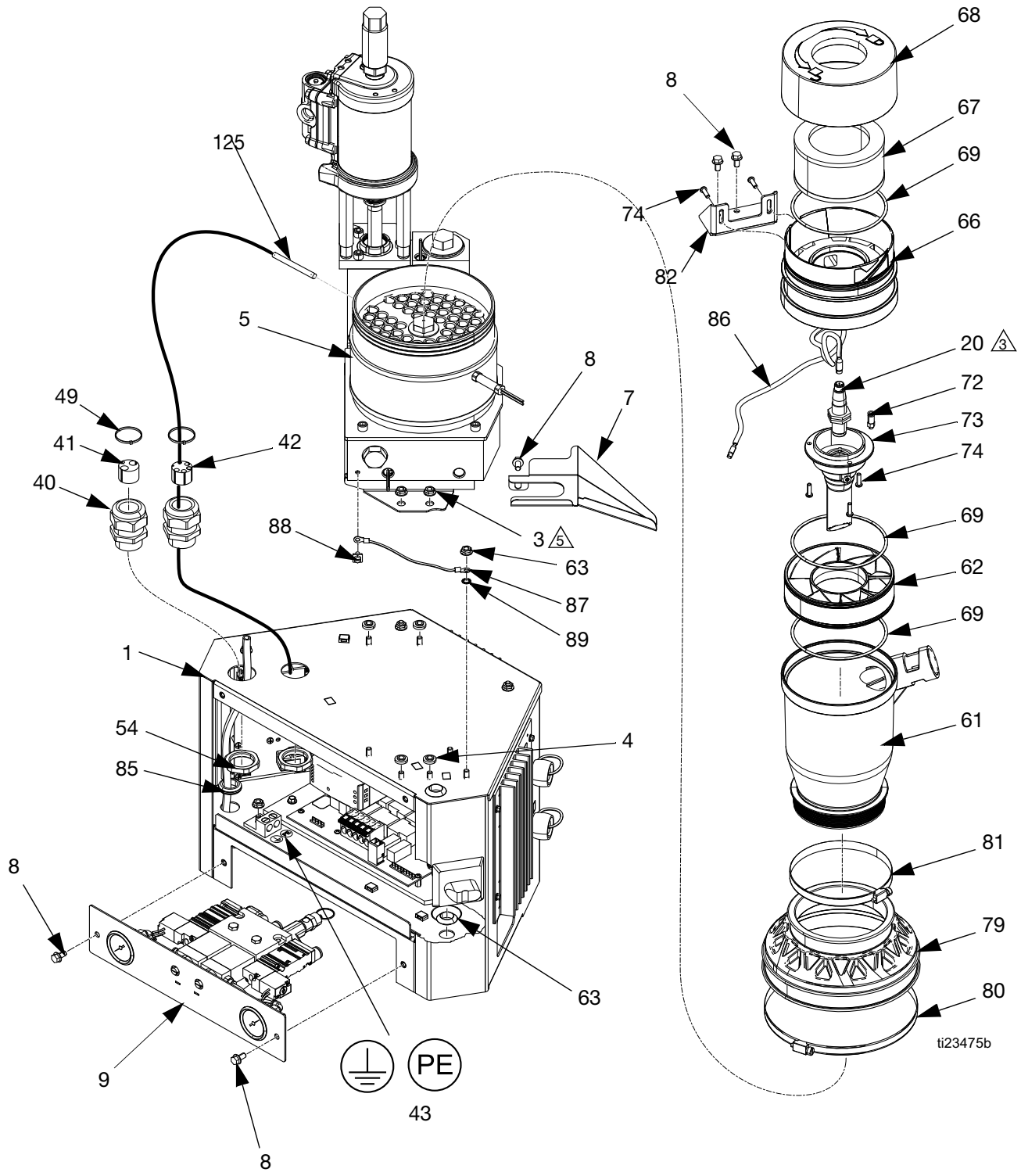

**System Parts, Page 3 of 3**

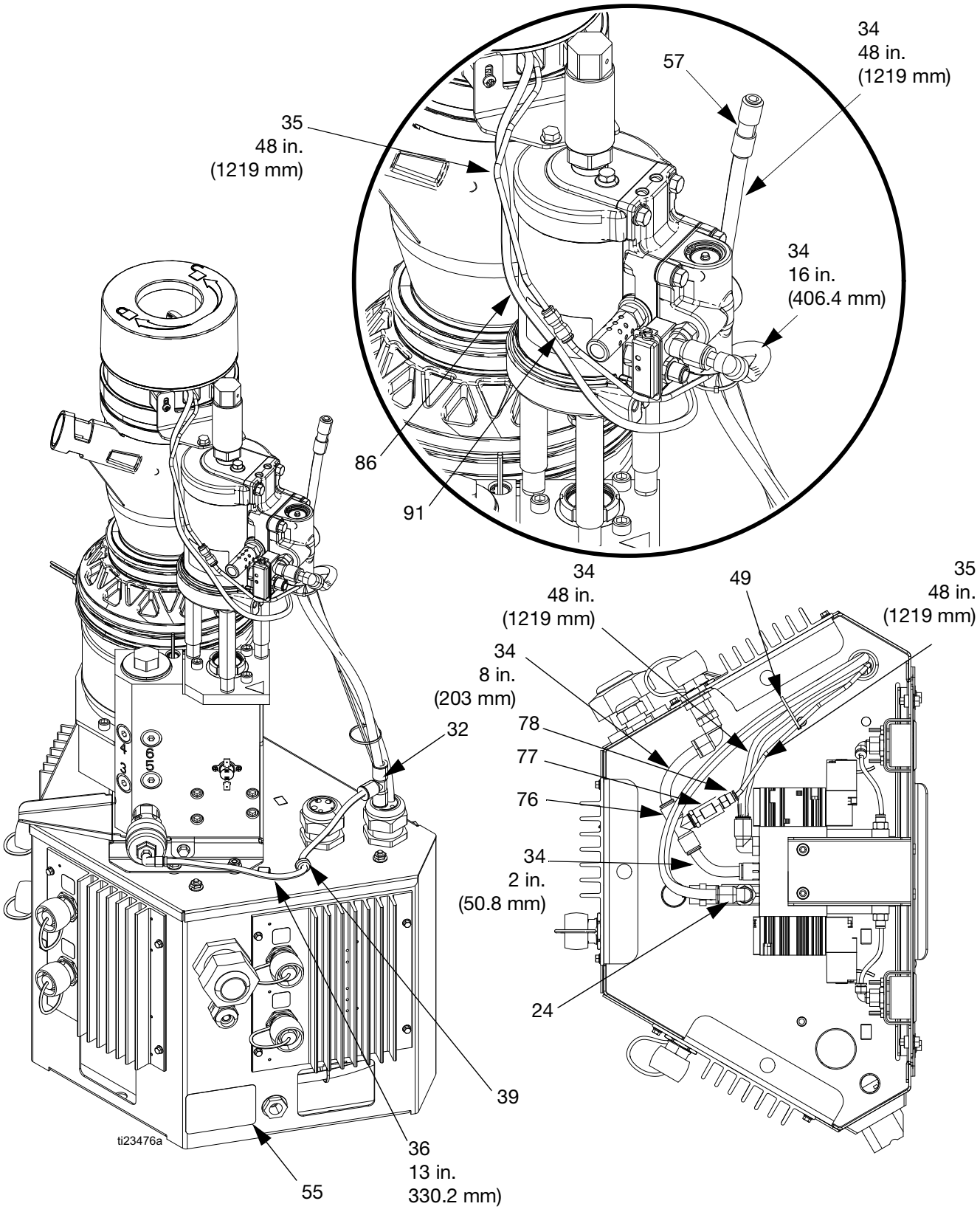

## System Parts

| Ref | Part | Description | Quantities | | | | | | | | | | | | | | | | | |
|---|---|---|---|---|---|---|---|---|---|---|---|---|---|---|---|---|---|---|---|---|
| | | | HM50 | | | | | | | | | HM25 | | | | | | | | |
| | | | 2 Channel | | | 4 Channel | | | 6 Channel | | | 2 Channel | | | 4 Channel | | | 6 Channel | | |
| | | | 24T918 | 24V201 | 24V198 | 24T919 | 24V202 | 24V199 | 24T920 | 24V203 | 24V200 | 24V423 | 24V429 | 24V426 | 24V424 | 24V430 | 24V427 | 24V425 | 24V431 | 24V428 |
| 1 | --- | ENCLOSURE, electrical | 1 | 1 | 1 | 1 | 1 | 1 | 1 | 1 | 1 | 1 | 1 | 1 | 1 | 1 | 1 | 1 | 1 | 1 |
| 3 | 115942 | NUT, hex, flange head | 8 | 8 | 8 | 8 | 8 | 8 | 8 | 8 | 8 | 8 | 8 | 8 | 8 | 8 | 8 | 8 | 8 | 8 |
| 4 | 167002 | INSULATOR, heat | 4 | 4 | 4 | 4 | 4 | 4 | 4 | 4 | 4 | 4 | 4 | 4 | 4 | 4 | 4 | 4 | 4 | 4 |
| 5 | 24V169 | SYSTEM, melter, HM25 | | | | | | | | | | 1 | 1 | 1 | 1 | 1 | 1 | 1 | 1 | 1 |
| | 24V542 | SYSTEM, melter/pump, HM50 | 1 | 1 | 1 | 1 | 1 | 1 | 1 | 1 | 1 | | | | | | | | | |
| 6✓ | --- | GUARD, insulated | | | | | | | | | | 1 | 1 | 1 | 1 | 1 | 1 | 1 | 1 | 1 |
| 6✚ | --- | INSULATOR, wrap | 1 | 1 | 1 | 1 | 1 | 1 | 1 | 1 | 1 | | | | | | | | | |
| 7 | --- | TRAY, drip | 1 | 1 | 1 | 1 | 1 | 1 | 1 | 1 | 1 | 1 | 1 | 1 | 1 | 1 | 1 | 1 | 1 | 1 |
| 8 | 113161 | SCREW, flange, hex hd | 17 | 17 | 17 | 17 | 17 | 17 | 17 | 17 | 17 | 17 | 17 | 17 | 17 | 17 | 17 | 17 | 17 | 17 |
| 9 | --- | MANIFOLD, air, assembly | 1 | 1 | 1 | 1 | 1 | 1 | 1 | 1 | 1 | 1 | 1 | 1 | 1 | 1 | 1 | 1 | 1 | 1 |
| 10 | --- | DOOR, front | 1 | 1 | 1 | 1 | 1 | 1 | 1 | 1 | 1 | 1 | 1 | 1 | 1 | 1 | 1 | 1 | 1 | 1 |
| 11 | --- | FOAM, border, door | 1 | 1 | 1 | 1 | 1 | 1 | 1 | 1 | 1 | 1 | 1 | 1 | 1 | 1 | 1 | 1 | 1 | 1 |
| 13✿ | 24P615 | FITTING, straight, hydraulic | 2 | 2 | 2 | 4 | 4 | 4 | 6 | 6 | 6 | 2 | 2 | 2 | 4 | 4 | 4 | 6 | 6 | 6 |
| 14 | 16V153 | WASHER, retaining | 4 | 4 | 4 | 4 | 4 | 4 | 4 | 4 | 4 | 4 | 4 | 4 | 4 | 4 | 4 | 4 | 4 | 4 |
| 15✖ | 114271 | STRAP, retaining | 8 | 8 | 8 | 16 | 16 | 16 | 24 | 24 | 24 | 8 | 8 | 8 | 16 | 16 | 16 | 24 | 24 | 24 |
| 18✿ | 126961 | FITTING, 45° elbow | 2 | 2 | 2 | 4 | 4 | 4 | 6 | 6 | 6 | 2 | 2 | 2 | 4 | 4 | 4 | 6 | 6 | 6 |
| 19✿ | 116793 | FITTING, 90° elbow | 2 | 2 | 2 | 4 | 4 | 4 | 6 | 6 | 6 | 2 | 2 | 2 | 4 | 4 | 4 | 6 | 6 | 6 |
| 20 | 24R041 | SENSOR, ultrasonic | 1 | 1 | 1 | 1 | 1 | 1 | 1 | 1 | 1 | 1 | 1 | 1 | 1 | 1 | 1 | 1 | 1 | 1 |
| 21✖ | 101976 | TOOL, allen, wrench | 1 | 1 | 1 | 1 | 1 | 1 | 1 | 1 | 1 | 1 | 1 | 1 | 1 | 1 | 1 | 1 | 1 | 1 |
| 23 | 114606 | PLUG, hole | 2 | 2 | 2 | 2 | 2 | 2 | 2 | 2 | 2 | 2 | 2 | 2 | 2 | 2 | 2 | 2 | 2 | 2 |
| 24 | 120753 | FITTING, push to connect elbow | 2 | 2 | 2 | 2 | 2 | 2 | 2 | 2 | 2 | 2 | 2 | 2 | 2 | 2 | 2 | 2 | 2 | 2 |
| 25◆ | --- | SWITCH, reed assy | 1 | 1 | 1 | 1 | 1 | 1 | 1 | 1 | 1 | 1 | 1 | 1 | 1 | 1 | 1 | 1 | 1 | 1 |
| 26◆ | --- | SCREW, pan head, #8-32 x 1.5" | 1 | 1 | 1 | 1 | 1 | 1 | 1 | 1 | 1 | 1 | 1 | 1 | 1 | 1 | 1 | 1 | 1 | 1 |
| 27 | --- | BRACKET, back HM50 | 1 | 1 | 1 | 1 | 1 | 1 | 1 | 1 | 1 | | | | | | | | | |
| | --- | BRACKET, back | | | | | | | | | | 1 | 1 | 1 | 1 | 1 | 1 | 1 | 1 | 1 |
| 28 | --- | COVER, filter | 1 | 1 | 1 | 1 | 1 | 1 | 1 | 1 | 1 | 1 | 1 | 1 | 1 | 1 | 1 | 1 | 1 | 1 |
| 29 | --- | COVER, melter HM50 | 1 | 1 | 1 | 1 | 1 | 1 | 1 | 1 | 1 | | | | | | | | | |
| | --- | COVER, system, HM25 | | | | | | | | | | 1 | 1 | 1 | 1 | 1 | 1 | 1 | 1 | 1 |
| 30✳ | 24P860 | MODULE, ADM | 1 | 1 | 1 | 1 | 1 | 1 | 1 | 1 | 1 | 1 | 1 | 1 | 1 | 1 | 1 | 1 | 1 | 1 |
| 31 | 117017 | WASHER | 2 | 2 | 2 | 2 | 2 | 2 | 2 | 2 | 2 | 2 | 2 | 2 | 2 | 2 | 2 | 2 | 2 | 2 |
| 32 | --- | FITTING, tee, reducer | 1 | 1 | 1 | 1 | 1 | 1 | 1 | 1 | 1 | 1 | 1 | 1 | 1 | 1 | 1 | 1 | 1 | 1 |
| 34 | --- | HOSE, nylon, wpr 250 psi | 8.10 | 8.10 | 8.10 | 8.10 | 8.10 | 8.10 | 8.10 | 8.10 | 8.10 | 8.10 | 8.10 | 8.10 | 8.10 | 8.10 | 8.10 | 8.10 | 8.10 | 8.10 |
| 35 | 598095 | TUBE, 5/32 OD, nylon | 4 | 4 | 4 | 4 | 4 | 4 | 4 | 4 | 4 | 4 | 4 | 4 | 4 | 4 | 4 | 4 | 4 | 4 |
| 36 | --- | TUBE, ptfe, 1/4 in. OD | 1.10 | 1.10 | 1.10 | 1.10 | 1.10 | 1.10 | 1.10 | 1.10 | 1.10 | 1.10 | 1.10 | 1.10 | 1.10 | 1.10 | 1.10 | 1.10 | 1.10 | 1.10 |
| 38 | 117126 | SCREW, shcs; m5x16 | 3 | 3 | 3 | 3 | 3 | 3 | 3 | 3 | 3 | 3 | 3 | 3 | 3 | 3 | 3 | 3 | 3 | 3 |
| 39 | --- | GROMMET, 1/4 ID | 1 | 1 | 1 | 1 | 1 | 1 | 1 | 1 | 1 | 1 | 1 | 1 | 1 | 1 | 1 | 1 | 1 | 1 |

| Ref | Part | Description | Quantities | | | | | | | | | | | | | | | | | |
|---|---|---|---|---|---|---|---|---|---|---|---|---|---|---|---|---|---|---|---|---|
| | | | HM50 | | | | | | | | | HM25 | | | | | | | | |
| | | | 2 Channel | | | 4 Channel | | | 6 Channel | | | 2 Channel | | | 4 Channel | | | 6 Channel | | |
| | | | 24T918 | 24V201 | 24V198 | 24T919 | 24V202 | 24V199 | 24T920 | 24V203 | 24V200 | 24V423 | 24V429 | 24V426 | 24V424 | 24V430 | 24V427 | 24V425 | 24V431 | 24V428 |
| 40 | --- | BUSHING, strain relief | 2 | 2 | 2 | 2 | 2 | 2 | 2 | 2 | 2 | 2 | 2 | 2 | 2 | 2 | 2 | 2 | 2 | 2 |
| 41 | --- | GROMMET, tube | 1 | 1 | 1 | 1 | 1 | 1 | 1 | 1 | 1 | 1 | 1 | 1 | 1 | 1 | 1 | 1 | 1 | 1 |
| 42 | --- | GROMMET, tube | 1 | 1 | 1 | 1 | 1 | 1 | 1 | 1 | 1 | 1 | 1 | 1 | 1 | 1 | 1 | 1 | 1 | 1 |
| 43▲ | 16Y781 | LABEL, safety | 1 | 1 | 1 | 1 | 1 | 1 | 1 | 1 | 1 | 1 | 1 | 1 | 1 | 1 | 1 | 1 | 1 | 1 |
| 44 | 16U007 | LABEL, InvisiPac, HM25 | | | | | | | | | | 1 | 1 | 1 | 1 | 1 | 1 | 1 | 1 | 1 |
| | --- | LABEL, InvisiPac HM50 | 1 | 1 | 1 | 1 | 1 | 1 | 1 | 1 | 1 | | | | | | | | | |
| 45 | --- | LABEL | 1 | 1 | 1 | 1 | 1 | 1 | 1 | 1 | 1 | 1 | 1 | 1 | 1 | 1 | 1 | 1 | 1 | 1 |
| 47✖ | 24P859 | KIT, fuses, board, temp control | 1 | 1 | 1 | 1 | 1 | 1 | 1 | 1 | 1 | 1 | 1 | 1 | 1 | 1 | 1 | 1 | 1 | 1 |
| 48✖ | 24P176 | KIT, i/o connector | 1 | 1 | 1 | 1 | 1 | 1 | 1 | 1 | 1 | 1 | 1 | 1 | 1 | 1 | 1 | 1 | 1 | 1 |
| 49 | 125871 | TIE, cable, 7.50 in. | 10 | 10 | 10 | 10 | 10 | 10 | 10 | 10 | 10 | 10 | 10 | 10 | 10 | 10 | 10 | 10 | 10 | 10 |
| 50☼ | --- | TOKEN, software | 1 | 1 | 1 | 1 | 1 | 1 | 1 | 1 | 1 | 1 | 1 | 1 | 1 | 1 | 1 | 1 | 1 | 1 |
| 53♯✚ | --- | INSULATOR, melter | 1 | 1 | 1 | 1 | 1 | 1 | 1 | 1 | 1 | | | | | | | | | |
| 53✓ | --- | INSULATOR, melter | | | | | | | | | | 1 | 1 | 1 | 1 | 1 | 1 | 1 | 1 | 1 |
| 54 | --- | NUT, bushing | 2 | 2 | 2 | 2 | 2 | 2 | 2 | 2 | 2 | 2 | 2 | 2 | 2 | 2 | 2 | 2 | 2 | 2 |
| 57 | 123554 | COUPLER, 3/8 in. OD tubing | 1 | 1 | 1 | 1 | 1 | 1 | 1 | 1 | 1 | 1 | 1 | 1 | 1 | 1 | 1 | 1 | 1 | 1 |
| 58 | 24A326 | BRACKET, mounting, assembly | 1 | 1 | 1 | 1 | 1 | 1 | 1 | 1 | 1 | 1 | 1 | 1 | 1 | 1 | 1 | 1 | 1 | 1 |
| 61★†⊗? | --- | FUNNEL, large mouth | 1 | 1 | 1 | 1 | 1 | 1 | 1 | 1 | 1 | 1 | 1 | 1 | 1 | 1 | 1 | 1 | 1 | 1 |
| 62† | --- | BAFFLE, pellet | 1 | 1 | 1 | 1 | 1 | 1 | 1 | 1 | 1 | 1 | 1 | 1 | 1 | 1 | 1 | 1 | 1 | 1 |
| 63 | 121487 | GROMMET, sheet metal, 3/4 in. | 2 | 2 | 2 | 2 | 2 | 2 | 2 | 2 | 2 | 2 | 2 | 2 | 2 | 2 | 2 | 2 | 2 | 2 |
| 64$ | 24R707 | KIT, inlet, air | 1 | 1 | 1 | 1 | 1 | 1 | 1 | 1 | 1 | 1 | 1 | 1 | 1 | 1 | 1 | 1 | 1 | 1 |
| 66† | --- | FUNNEL, insert | 1 | 1 | 1 | 1 | 1 | 1 | 1 | 1 | 1 | 1 | 1 | 1 | 1 | 1 | 1 | 1 | 1 | 1 |
| 67† | 24V506 | FILTER, HM50 feed | 1 | 1 | 1 | 1 | 1 | 1 | 1 | 1 | 1 | 1 | 1 | 1 | 1 | 1 | 1 | 1 | 1 | 1 |
| 68† | --- | FUNNEL, filter cover | 1 | 1 | 1 | 1 | 1 | 1 | 1 | 1 | 1 | 1 | 1 | 1 | 1 | 1 | 1 | 1 | 1 | 1 |
| 69† | --- | O-RING, fluoroelastomer, 160 | 3 | 3 | 3 | 3 | 3 | 3 | 3 | 3 | 3 | 3 | 3 | 3 | 3 | 3 | 3 | 3 | 3 | 3 |
| 72 | 110932 | CONNECTOR, male | 1 | 1 | 1 | 1 | 1 | 1 | 1 | 1 | 1 | 1 | 1 | 1 | 1 | 1 | 1 | 1 | 1 | 1 |
| 73† | --- | HOUSING, sensor, HM50 | 1 | 1 | 1 | 1 | 1 | 1 | 1 | 1 | 1 | 1 | 1 | 1 | 1 | 1 | 1 | 1 | 1 | 1 |
| 74† | --- | SCREW, #10-16, thread forming | 5 | 5 | 5 | 5 | 5 | 5 | 5 | 5 | 5 | 5 | 5 | 5 | 5 | 5 | 5 | 5 | 5 | 5 |
| 75✓ | --- | INSULATOR, melter manifold | | | | | | | | | | 1 | 1 | 1 | 1 | 1 | 1 | 1 | 1 | 1 |
| 75✚ | --- | INSULATOR, melter, manifold | 1 | 1 | 1 | 1 | 1 | 1 | 1 | 1 | 1 | | | | | | | | | |
| 76 | --- | FITTING, tee, 1/8npt x 3/8t x 3/8t | 1 | 1 | 1 | 1 | 1 | 1 | 1 | 1 | 1 | 1 | 1 | 1 | 1 | 1 | 1 | 1 | 1 | 1 |
| 77 | --- | RESTRICTOR, air, 0.0225 in. orifice | 1 | 1 | 1 | 1 | 1 | 1 | 1 | 1 | 1 | 1 | 1 | 1 | 1 | 1 | 1 | 1 | 1 | 1 |
| 78 | 198177 | FITTING, push, straight | 1 | 1 | 1 | 1 | 1 | 1 | 1 | 1 | 1 | 1 | 1 | 1 | 1 | 1 | 1 | 1 | 1 | 1 |
| 79★†⊗? | --- | ADAPTER, HM25 | | | | | | | | | | 1 | 1 | 1 | 1 | 1 | 1 | 1 | 1 | 1 |
| | --- | ADAPTER, melter HM50 | 1 | 1 | 1 | 1 | 1 | 1 | 1 | 1 | 1 | | | | | | | | | |
| 80★† | --- | CLAMP, hose, spacer | 1 | 1 | 1 | 1 | 1 | 1 | 1 | 1 | 1 | | | | | | | | | |
| 81★⊗? | --- | CLAMP, hose, spacer | 1 | 1 | 1 | 1 | 1 | 1 | 1 | 1 | 1 | 2 | 2 | 2 | 2 | 2 | 2 | 2 | 2 | 2 |

| Ref | Part | Description | Quantities | | | | | | | | | | | | | | | | | |
|---|---|---|---|---|---|---|---|---|---|---|---|---|---|---|---|---|---|---|---|---|
| | | | HM50 | | | | | | | | | HM25 | | | | | | | | |
| | | | 2 Channel | | | 4 Channel | | | 6 Channel | | | 2 Channel | | | 4 Channel | | | 6 Channel | | |
| | | | 24T918 | 24V201 | 24V198 | 24T919 | 24V202 | 24V199 | 24T920 | 24V203 | 24V200 | 24V423 | 24V429 | 24V426 | 24V424 | 24V430 | 24V427 | 24V425 | 24V431 | 24V428 |
| 82 | --- | BRACKET, funnel, HM25 | | | | | | | | | | 1 | 1 | 1 | 1 | 1 | 1 | 1 | 1 | 1 |
| | --- | BRACKET, HM50, funnel, mounting | 1 | 1 | 1 | 1 | 1 | 1 | 1 | 1 | 1 | | | | | | | | | |
| 83 | 123986 | FITTING, elbow, 3/8 OD tube | 1 | 1 | 1 | 1 | 1 | 1 | 1 | 1 | 1 | 1 | 1 | 1 | 1 | 1 | 1 | 1 | 1 | 1 |
| 85 | --- | GROMMET | 1 | 1 | 1 | 1 | 1 | 1 | 1 | 1 | 1 | 1 | 1 | 1 | 1 | 1 | 1 | 1 | 1 | 1 |
| 86 | 127666 | CABLE, gca, m12-5p | 1 | 1 | 1 | 1 | 1 | 1 | 1 | 1 | 1 | 1 | 1 | 1 | 1 | 1 | 1 | 1 | 1 | 1 |
| 87 | --- | WIRE, ground | 1 | 1 | 1 | 1 | 1 | 1 | 1 | 1 | 1 | 1 | 1 | 1 | 1 | 1 | 1 | 1 | 1 | 1 |
| 88 | 116343 | SCREW, ground | 1 | 1 | 1 | 1 | 1 | 1 | 1 | 1 | 1 | 1 | 1 | 1 | 1 | 1 | 1 | 1 | 1 | 1 |
| 89 | --- | WASHER, 1/4 external tooth lock | 1 | 1 | 1 | 1 | 1 | 1 | 1 | 1 | 1 | 1 | 1 | 1 | 1 | 1 | 1 | 1 | 1 | 1 |
| 90 | --- | PLUG, phoenix, 8 pos | 1 | 1 | 1 | 1 | 1 | 1 | 1 | 1 | 1 | 1 | 1 | 1 | 1 | 1 | 1 | 1 | 1 | 1 |
| 91 | --- | FITTING, 5/32 in. OD tube, push-to-con | 1 | 1 | 1 | | | | | | | 1 | 1 | 1 | | | | | | |
| 92✖ | 17A345 | TOOL, 5/16 nut driver | 1 | 1 | 1 | 1 | 1 | 1 | 1 | 1 | 1 | 1 | 1 | 1 | 1 | 1 | 1 | 1 | 1 | 1 |
| 93✖ | 127735 | STRAP, lifting 3 ft | | 1 | 1 | | 1 | 1 | | 1 | 1 | | 1 | 1 | | 1 | 1 | | 1 | 1 |
| 94◆ | --- | WASHER, flat | 1 | 1 | 1 | 1 | 1 | 1 | 1 | 1 | 1 | 1 | 1 | 1 | 1 | 1 | 1 | 1 | 1 | 1 |

*--- Not for sale.*

▲ *Replacement Danger and Warning labels, tags, and cards are available at no cost.*

❊ *ADM does not come with software. Order software token 24R324.*

✖ *Not shown.*

$ *Replacement filter element is 24X967.*

✓ *Part of Kit 25A897 (HM25)*

✚ *Part of Kit 25A898 (HM50)*

*Available kits (purchase separately):*

| Kit | Description | Includes |
|---|---|---|
| 25A897 | Insulation, HM25 | 6, 53 |
| 25A898 | Insulation, HM50 | 6, 53 |
| 24R885◆ | Cycle Switch | 25, 26, 94 |
| 24R028* | Inlet housing | 12, 13, 62 |
| 24V505† | Funnel, HM25 | 61, 62, 66, 67, 68, 69, 73, 74, 79, 81. See **Feed Inlet Funnel, 24V505 HM25** on page 108. |
| 25T368⊗ | Funnel, HM50 | 61, 62, 66, 67, 68, 69, 73, 74, 79, 80, 81. See **Feed Inlet Funnel, 25T368 HM50** on page 109. |
| 24V508ǂ | Melter | 53, 202, 204, 207, 211, and 253. See **Melter and Pump Assembly** on page 103 for identification of items 202-253. |
| 24V504✿ | Hydraulic Fittings | 13, 18, 19 |
| 24U635 | Acrylic Lens Pressure Gauge | |
| 24W000★ | Melter Adapter HM50 | 61, 79, 80, 81 |
| 24W001? | Melter Adapter HM25 | 61, 79, 81 |
| 24X967$ | Replacement air filter element | |
| 25C525 | Shroud, HM25 | 8, 14, 29, 44 |
| 25C526 | Shroud, HM50 | 8, 14, 29, 44 |

# Electrical Enclosure, Systems without Internal Pattern Controller

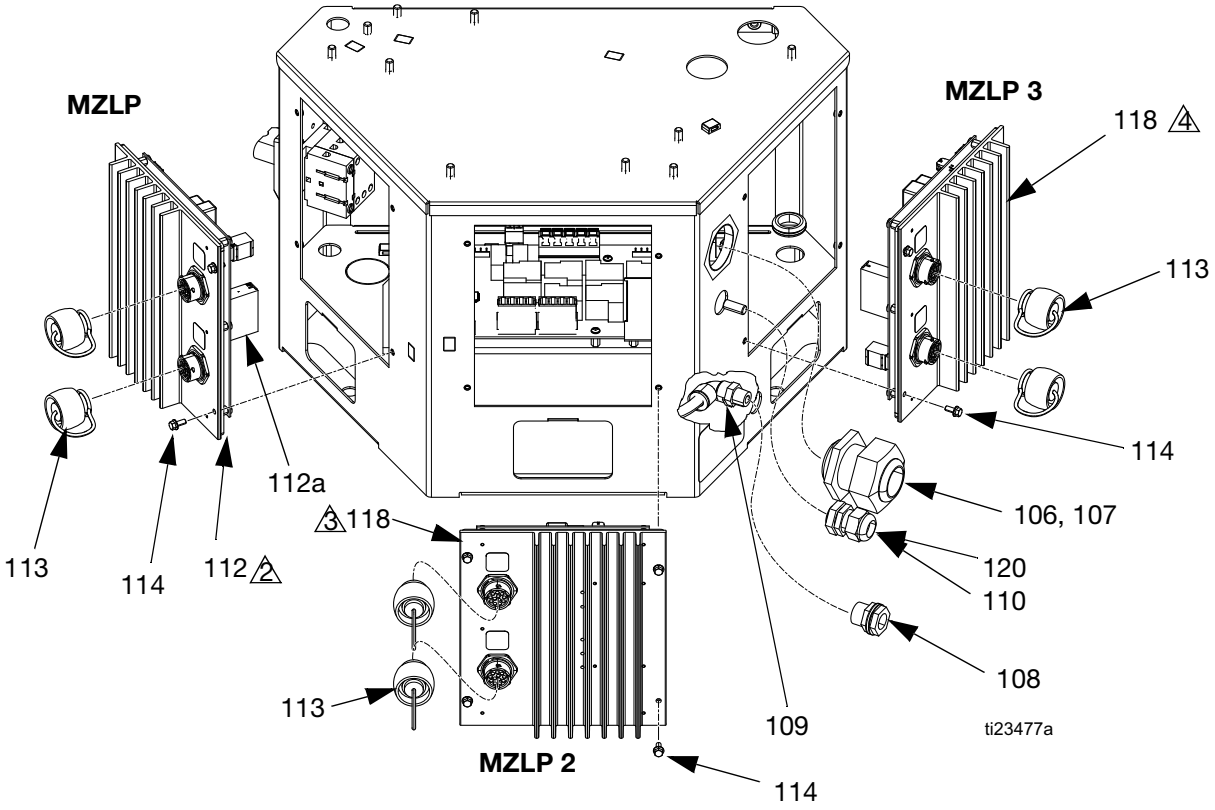


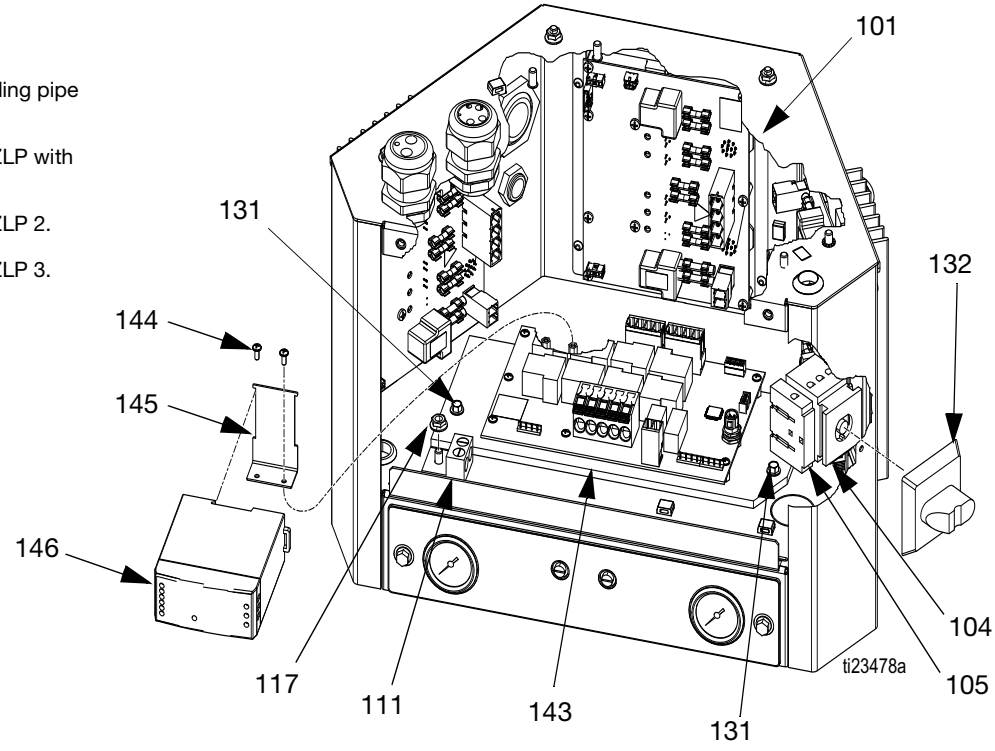


1 Apply sealant to all non-swiveling pipe threads.

2 Set rotary switch to “1” on MZLP with daughter card.

3 Set rotary switch to “2” on MZLP 2.

4 Set rotary switch to “3” on MZLP 3.

# Electrical Enclosure, Systems with Internal Pattern Controller

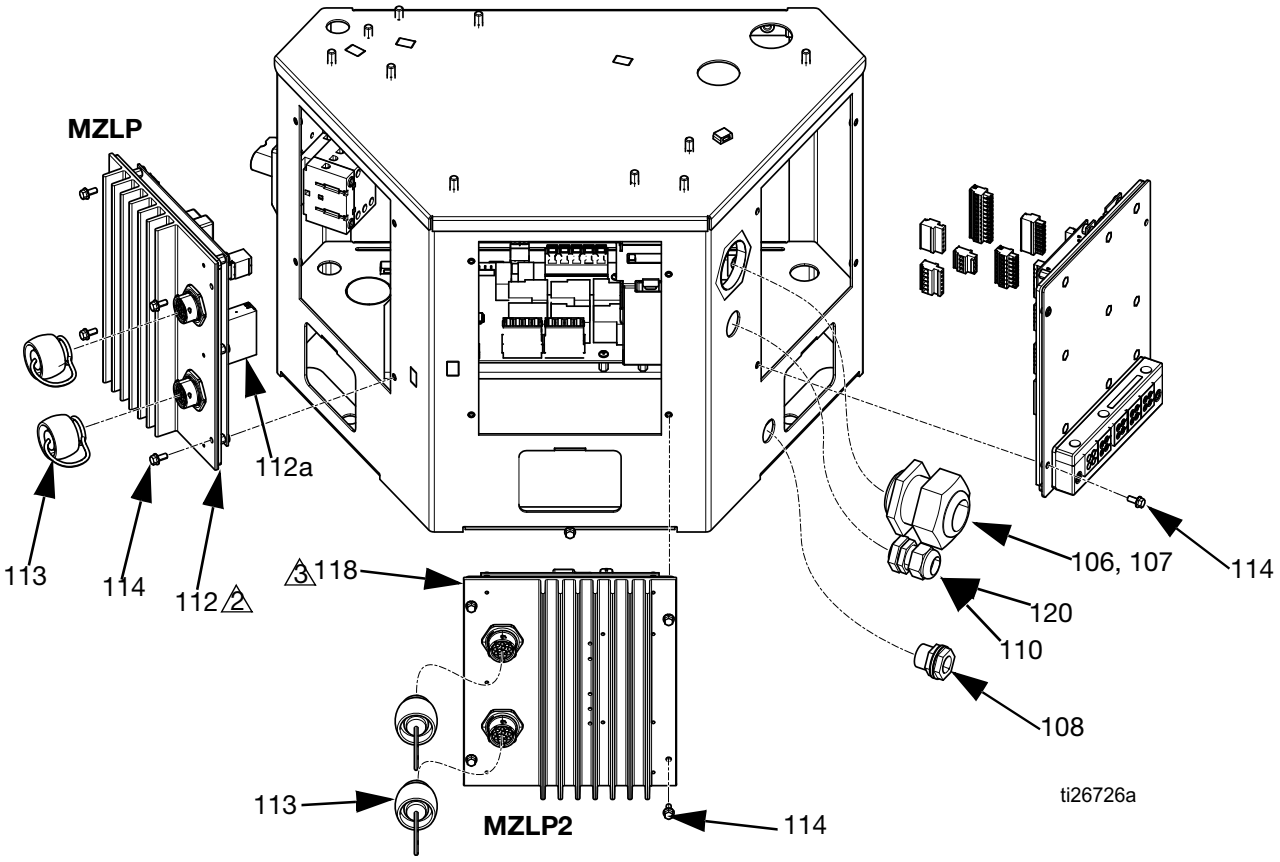


⚠1 Apply sealant to all non-swiveling pipe threads.

⚠2 Set rotary switch to "1" on MZLP with daughter card.

⚠3 Set rotary switch to "2" on MZLP 2.

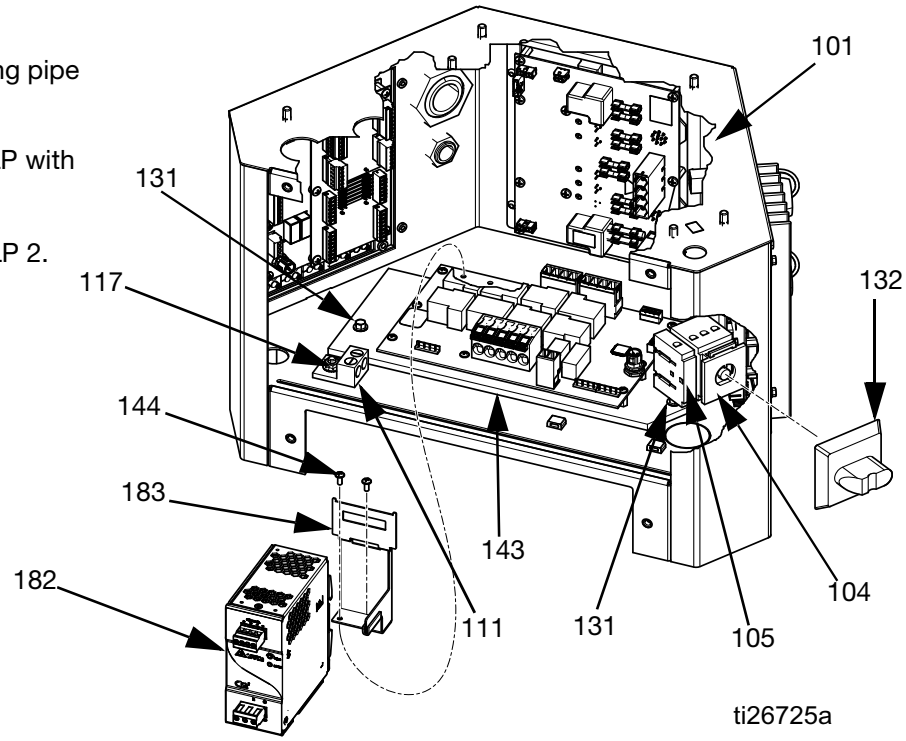

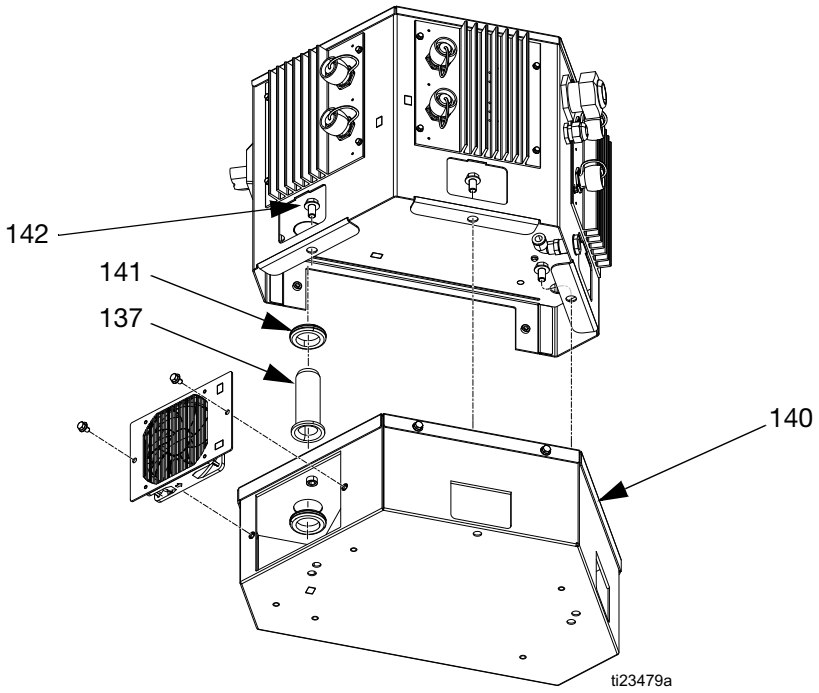


## Electrical Enclosure Parts

| Ref | Part | Description | Quantity | | | | | |
|---|---|---|---|---|---|---|---|---|
| | | | 1 MZLP | 2 MZLP | 3 MZLP | 1 MZLP | 2 MZLP | 3 MZLP |
| | | | No Transformer | | | 400/480 V Transformer | | |
| 101 | --- | CABINET, controls | 1 | 1 | 1 | 1 | 1 | 1 |
| 102 | 127666 | CABLE, gca, m12-5p | 1 | 1 | 1 | | | |
| 103 | --- | HARNESS, MZLP1, AWB | 1 | 1 | 1 | 1 | 1 | 1 |
| 104 | 123970 | SWITCH, disconnect, 40a | 1 | 1 | 1 | 1 | 1 | 1 |
| 105 | 126839 | CONTACT, n-pole | 1 | 1 | 1 | 1 | 1 | 1 |
| 106 | 120858 | BUSHING, strain relief, m40 thread | 1 | 1 | 1 | 1 | 1 | 1 |
| 107 | 120859 | NUT, strain relief, m40 thread | 1 | 1 | 1 | 1 | 1 | 1 |
| 108 | 104641 | FITTING, bulkhead | 1 | 1 | 1 | 1 | 1 | 1 |
| 109 | 121141 | FITTING, elbow, swivel, 3/8t 1/4mnpt | 1 | 1 | 1 | 1 | 1 | 1 |
| 110 | 114421 | BUSHING, strain relief | 1 | 1 | 1 | 1 | 1 | 1 |
| 111 | 117666 | TERMINAL, ground | 1 | 1 | 1 | 1 | 1 | 1 |
| 112* | --- | MODULE, MZLP with daughter board | 1 | 1 | 1 | 1 | 1 | 1 |
| 112a | 24R042 | KIT, board, daughter | 1 | 1 | 1 | 1 | 1 | 1 |
| 113 | 16T440 | CAP, souriau, uts14 | 2 | 4 | 6 | 2 | 4 | 6 |
| 114 | 125856 | SCREW, 8-32, serrated flange | 12 | 12 | 12 | 12 | 12 | 12 |
| 116 | 24P175 | PLATE, blank, sgl mztcm | 2 | 1 | | 2 | 1 | |
| 117 | 115942 | NUT, hex, flange head | 1 | 1 | 1 | 1 | 1 | 1 |
| 118 | 24V510 | MODULE, gca, MZLP | | 1 | 2 | | 1 | 2 |
| 119 | --- | GASKET, foam, mztcm | 2 | 1 | | 2 | 1 | |
| 120 | --- | PIN, dowel | 1 | 1 | 1 | 1 | 1 | 1 |
| 121 | 16T087 | CABLE, board, male/male, 21 in. | | 1 | 2 | | 1 | 2 |
| 123 | 127768 | CABLE, can, female/female 1.5 m | 1 | 1 | 1 | 1 | 1 | 1 |
| 124 | 16T103 | CABLE, pump | 1 | 1 | 1 | 1 | 1 | 1 |
| 125◆ | --- | SENSOR, rtd, 1m | 1 | 1 | 1 | 1 | 1 | 1 |

| Ref | Part | Description | Quantity | | | | | |
|---|---|---|---|---|---|---|---|---|
| | | | 1 MZLP | 2 MZLP | 3 MZLP | 1 MZLP | 2 MZLP | 3 MZLP |
| | | | No Transformer | | | 400/480 V Transformer | | |
| 126 | 16T108 | CABLE, ultrasonic, m12-4p, 1m | 1 | 1 | 1 | 1 | 1 | 1 |
| 129 | --- | HARNESS, MZLP 2, awb | | 1 | | | 1 | |
| | --- | HARNESS, MZLP 2/3, awb | | | 1 | | | 1 |
| 130 | 114958 | STRAP, tie | 4 | 4 | 4 | 4 | 4 | 4 |
| 131 | --- | SCREW, flange, serrated, 10-24 x 0.5 | 2 | 2 | 2 | 2 | 2 | 2 |
| 132 | 123967 | KNOB, operator disconnect | 1 | 1 | 1 | 1 | 1 | 1 |
| 135 | 16W035 | CONNECTOR, jumper | | | 1 | | | 1 |
| 136 | --- | HARNESS, MZLP 1, awb | 1 | 1 | 1 | 1 | 1 | 1 |
| 137 | --- | BUSHING, cable | | | | 1 | 1 | 1 |
| 138 | --- | HARNESS, disc, awb | 1 | 1 | 1 | 1 | 1 | 1 |
| 140 | 24V015 | TRANSFORMER, assembly, 480v/240v | | | | 1 | 1 | 1 |
| 141 | --- | GROMMET, air fitting | | | | 1 | 1 | 1 |
| 142 | 113802 | SCREW, hex hd, flanged, 3/8-16 x 5/8 | | | | 3 | 3 | 3 |
| 143 | 24V816 | MODULE, awb | 1 | 1 | 1 | 1 | 1 | 1 |
| 144 | 114331 | SCREW, mach, pnh, sems; 6-32 x 3/8 | 2 | 2 | 2 | 2 | 2 | 2 |
| 145 | --- | BRACKET, power supply | | | | 1 | 1 | 1 |
| 146 | 126453 | POWER SUPPLY, 24v | 1 | 1 | 1 | 1 | 1 | 1 |
| 147 | --- | HARNESS, power supply, awb | 1 | 1 | 1 | 1 | 1 | 1 |
| 148 | --- | CABLE, board, samtec | 1 | 1 | 1 | 1 | 1 | 1 |

* *Purchase MZLP (118) and daughter board (112a) separately.*

*Available kits (purchase separately):*

| Kit | Description | Includes |
|---|---|---|
| 24V528† | Upgrade from 2 channel system to 4 channel system | 113, 118, 121, 129, a grounding wrist strap, and a software upgrade token. See **4 Channel Upgrade Kit, 24V528** on page 117. |
| 24V529✿ | Upgrade from 4 channel system to 6 channel system | 113, 118, 121, 129,134, 135, grounding wrist strap, and a software upgrade token. See **6 Channel Upgrade Kit, 24V529** on page 120. |
| 24R040◆ | RTD | 125, 251, and 255. See **Melter and Pump Assembly** on page 103. |
| 24V289 | MZLP fuses | Qty 8 - 8 Amp, 250V Fuses<br>Qty 2 - 25 Amp, 250V Fuses |
| 24P176 | Customer I/O Connectors | 2 connectors for connecting to H1 and H2 on MZLP daughter board. Use for PLC connection. |
| 24X640† | Add internal PC-8 to 2-channel or 4-channel systems. | 181 (all items), 182, 183, 184, 185, 186, 189, 190, 192, 193. See manual 334874. |
| 17F172 | Upgrade internal PC-8 to PC-8e. | Key token to enable encoder and 4 connectors for wiring. See manual 334874. |

## Internal Pattern Controller Components

| Ref | Part | Description | Qty |
|---|---|---|---|
| 181+ | 24X521 | MODULE, GCA, Internal PC-8 | 1 |
| 181b+ | 128176 | FRAME, cable grip, 5-position | 1 |
| 181c+ | 128177 | INSERT, rubber, cable grip, 4x6mm | 1 |
| 181d+ | --- | PIN, .250 in | 4 |
| 181e+ | 128178 | INSERT, rubber, cable grip, 4x3mm | 4 |
| 181f+ | --- | PIN, .125 in | 16 |
| 181g+ | --- | SCREW, #10-32 x .750 | 2 |
| 182+ | 128180 | POWER SUPPLY, 120 W | 1 |
| 183+ | 128443 | BRACKET, power supply, PC-8 Internal | 1 |
| 188+% | --- | TOOL, screwdriver | 1 |
| 187+% | 128340 | FUSE, automotive, 4A, 32V, mini | 1 |
| 189+ | 116772 | CONNECTOR, plug, 4-position | 1 |
| 190+ | 119162 | CONNECTOR, plug, 6-position | 2 |
| 192+ | 128147 | CONNECTOR, plug, 8-position | 2 |
| 193+ | 128117 | CONNECTOR, plug, 12-position | 1 |

*% not shown*

# Transformer Assemblies

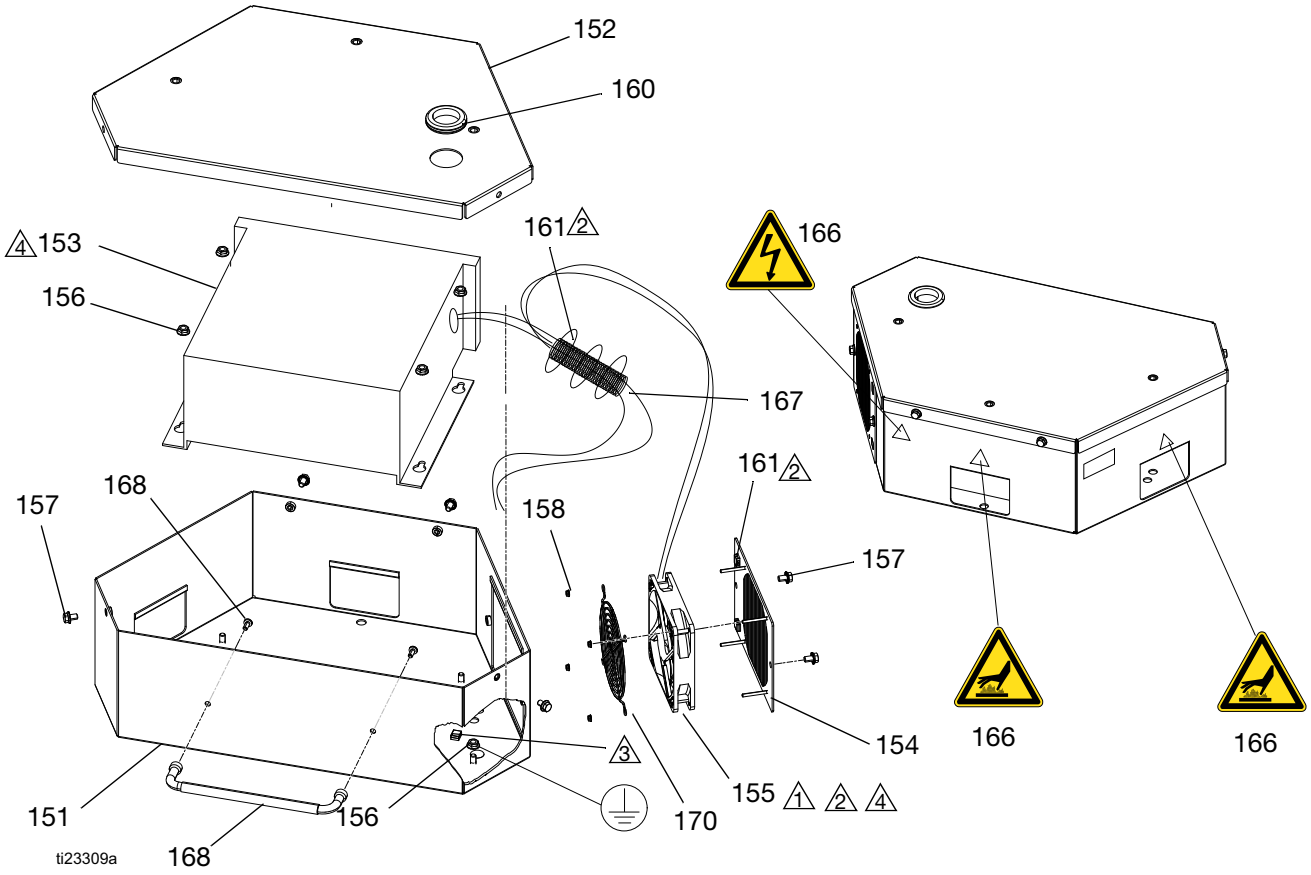


△1 Mount fan with arrow pointing towards grill.

△2 Tie down cabling from transformer and fan using cable tie onto tie down locations. Remove excess slack and ensure cabling does not contact fan blades.

△3 Use nut to lock down the ground wire from transformer.

△4 Connect black fan wire labeled (-) from transformer (153) in the pin labeled (-). Connect red fan wire labeled (+) to the connector coming from transformer (153).

### Transformer Assemblies

| Ref. | Part | Description | Qty |
|---|---|---|---|
| 151 | --- | ENCLOSURE, base, 480v | 1 |
| 152 | --- | ENCLOSURE, top, 480v | 1 |
| 153 | --- | TRANSFORMER, 480v/240v, 6kva; 480V systems only | 1 |
| | --- | TRANSFORMER, 400v/240v, 6kva; 400V systems only | 1 |
| 154 | --- | GRILL, fan | 1 |
| 155★ | --- | FAN, 24 vdc, 120m x 120m | 1 |
| 156 | 115942 | NUT, hex, flange head | 5 |
| 157 | 119865 | SCREW, mach, hex serrated, 1/4 x 3/8 in. | 6 |
| 158 | 127278 | NUT, keps, hex | 4 |
| 160 | --- | GROMMET, air fitting | 1 |
| 161 | 125871 | TIE, cable, 7.5 in. | 5 |
| 162 | 172953 | LABEL, designation | 1 |
| 166▲ | 17A071 | LABEL, safety, warning | 1 |
| 167 | --- | TUBE, corrugated, slit; 6 in. (152.4 mm) | 1 |
| 168 | | | |
| 169 | | | |
| 170 | 127754 | GRILL, fan | |

▲ *Replacement Danger and Warning labels, tags, and cards are available at no cost.*

★ *Included in Fan Replacement Kit 24V911.*

--- *Not for sale.*

# Melter and Pump Assembly

**HM25, 24V169**
**HM50, 24V542**

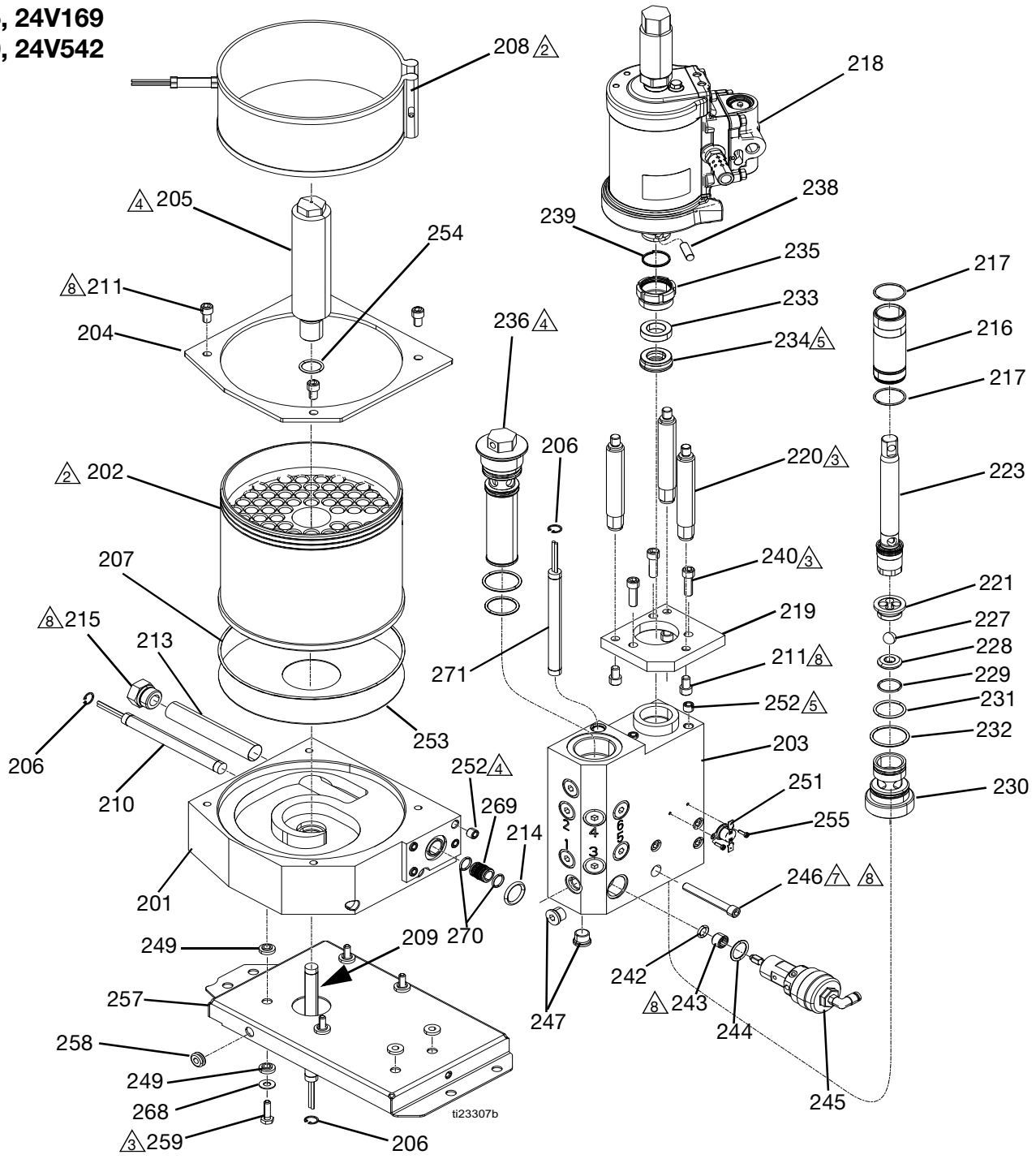


1 Lubricate all seals and o-rings with grease.

2 Orient melter (202) sensor hole in line with band heater (208) clamp.

3 Torque to 5-11 ft-lb (7-15 N•m).

4 Assemble inserts (252) 0.01-0.05 in. (0.3-1.3 mm) below surface.

5 Orient u-cup (234) with spring in direction shown.

6 Torque to 27-33 in.-lb (3-3.8 N•m).

7 Apply anaerobic thread sealant on threads.

8 Torque to 12-18 ft-lb (16-24 N•m).

## HM25 Meter and Pump, 17F830
## HM50 Melter and Pump, 24V542

| Ref. | Part | Description | Qty. |
|---|---|---|---|
| 201 | --- | BASE, melter, HM50 | 1 |
| | --- | BASE, melter, HM25 | 1 |
| 202✖ | --- | TANK, melter, HM50 | 1 |
| | --- | TANK, melter, HM25 | 1 |
| 203• | --- | MANIFOLD, outlet | 1 |
| 204✖ | --- | PLATE, mounting; HM50 | 1 |
| | --- | PLATE, mounting; HM25 | 1 |
| 205 ❊ | --- | HOUSING, fire rod; HM50 | 1 |
| | --- | HOUSING, fire rod; HM25 | 1 |
| 206• | 111317 | RING, retaining, int. | 3 |
| 207✖ | 16W615 | O-RING, fluoroelastomer; (HM50 only) | 1 |
| | 126475 | O-RING, fluoroelastomer; (HM25 only) | 1 |
| 208 | 24V522 | BAND, heater; HM50 only | 1 |
| | 24R039 | BAND, heater; HM25 only | 1 |
| 209• ❊ | --- | HEATER, rod,1500 watts; HM50 | 1 |
| | --- | HEATER, rod, 500 watts; HM25 | 1 |
| 210 | 25C445 | HEATER, rod,1000 watts; HM50 | 1 |
| | 25C448 | HEATER, rod,1000 watts; HM25 | 1 |
| 211✖ | 128167 | SCREW, cap,sh,5/16-18 | 7 |
| 213 | 24R369 | SCREEN, wire | 1 |
| 214• | 112855 | PACKING, o-ring | 1 |
| 215 | 24T297 | PLUG, o-ring boss | 1 |
| 216‡• | --- | SLEEVE, cylinder | 1 |
| 217†‡• | 108526 | PACKING, o-ring, ptfe | 2 |
| 218 | 24V558 | MOTOR, double ended, air; see page 105 | 1 |
| 219 | --- | PLATE, pump adapter | 1 |
| 220 | --- | ROD, tie, 1.5 in. stroke | 3 |
| 221• | 192624 | GUIDE, ball | 1 |
| 223◆• | 24P854 | KIT, assembly, pump, rod | 1 |
| 227†• | 105445 | BALL, (.5000) | 1 |
| 228†• | 192642 | SEAT, carbide | 1 |
| 229†• | 107079 | PACKING, o-ring | 1 |
| 230• | --- | HOUSING, foot valve | 1 |
| 231†• | 105802 | O-RING | 1 |
| 232†• | 113944 | PACKING, o-ring | 1 |
| 233†• | --- | BEARING, throat | 1 |
| 234†‡• | --- | SEAL, u-cup, throat | 1 |
| 235• | 193046 | NUT, packing | 1 |
| 236• | 24P855 | FILTER, assy, 100 mesh, welded | 1 |
| 238 | 196762 | PIN, straight | 1 |
| 239 | 196750 | SPRING, retaining | 1 |
| 240 | 128190 | SCREW, cap, sch; 5/16 x 1 in. | 3 |
| 242★• | 117059 | O-RING, fluoroelastomer | 1 |
| 243★• | --- | RETAINER, seat, dump valve | 1 |
| 244★• | 15Y627 | PACKING, o-ring #2-116, ptfe | 1 |
| 245★• ❊ | --- | VALVE, relief | 1 |
| 246• | C19829 | SCREW, cap, socket head; 5/16 x 2.5 in. | 4 |
| 247• | 15H304 | FITTING, plug 9/16 sae | 9 |
| 249 | 167002 | INSULATOR, heat | 10 |
| 251✿• | 126780 | SWITCH, overtemperature | 1 |
| 252• | --- | INSERT, helical | 7 |
| 253✖ | --- | PLATE, melter; HM50 only | 1 |
| | --- | PLATE, melter; HM25 only | 1 |
| 254 | --- | O-RING, -910 | 1 |
| 255✿• | 107388 | SCREW, mach, pnh; #4 x 3/8 in. | 2 |
| 257 | --- | BRACKET, shelf; HM50 only | 1 |
| | --- | BRACKET, shelf; HM25 only | 1 |
| 258 | --- | GROMMET, 1/4 ID | 1 |
| 259 | 110298 | SCREW, cap, sch, 1/4 x 7/8 in.; HM50 only | 4 |
| | 115506 | SCREW, mach, hex wash hd, 1/4 x 3 in.; HM25 only | 4 |
| 268 | 115814 | WASHER, flat, sst; HM50 only | 4 |
| 269 | 128612 | TUBE, cross over | 1 |
| 270 | 103610 | O-RING, 014 | 2 |
| 271 | 25C446 | HEATER, rod, 1000 watts; HM50 | 1 |
| | 25C447 | HEATER, rod, 1000 watts; HM25 | 1 |

--- *Not for sale.*

*Available kits (purchase separately):*

| Kit | Description | Includes |
|---|---|---|
| 24P852† | Pump repair | 217, 223 (Pump Rod Assembly Kit shown in this table), 227, 228, 229, 231, 232, 233, 234, and Seal Installation Tool 15B661. |
| 24P853‡ | Cylinder | 216, 217, 234, and seal installation tool 15B661. |
| 24P854◆ | KIT, assembly, pump, rod | 223 shown as a complete assembly. |
| 24P856★ | Pressure relief valve | 242, 243, 244, 245 |
| 24V508✖<br>24R031✖ | Melter HM50<br>Melter HM25 | 202, 204, 207, 211, 253, and insulator (53). See **InvisiPac Systems** parts starting on page 92 for insulator (53) identification. |
| 24R040✿ | Kit, RTD harness and switch | 125, 251, and 255. See **Electrical Enclosure, Systems without Internal Pattern Controller** on page 98. |
| 24R709 • | Assembled pump manifold | 203, 206, 209, 214, 216, 217, 221-236, 242-247, 251, 252, 255 |
| --- | Special tools | See **Special Tools** on page 110. |
| 24R034 ❊<br>25M208 ❊ | Fire rod housing HM25<br>Fire rod housing HM50 | 205, 209, 254 |
| 25A893<br>25A894 | HM25 Melter Base with heater rods<br>HM50 Melter Base with heater rods | 201, 206, 210, 213, 215, 252 |
| 25A895<br>25A896 | HM25 Outlet Manifold with heater rods<br>HM50 Outlet Manifold with heater rods | 203, 206, 271, 247, 252 |

# Air Motor, 24V558

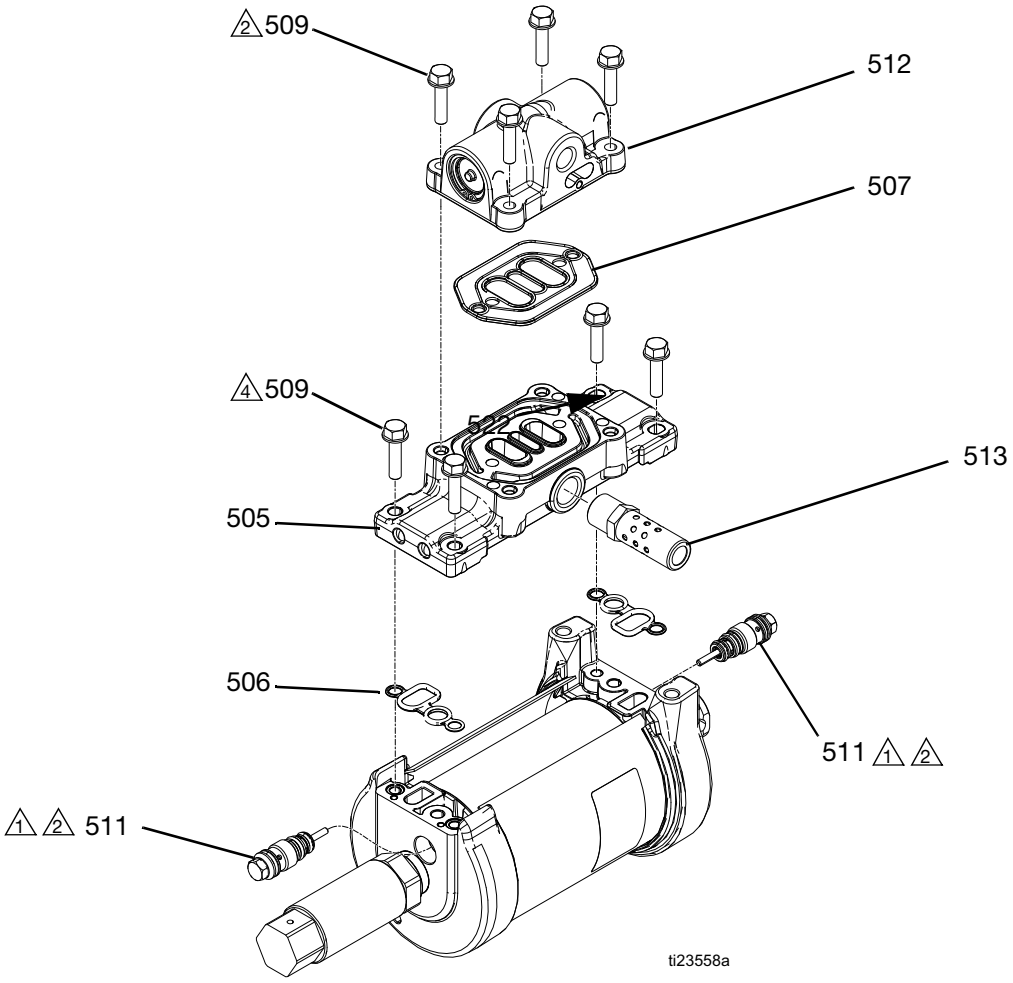


1 Apply water-resistant grease.

2 Torque to 95-105 in-lb (10.7-11.9 N•m).

| Ref. | Part | Description | Qty |
|---|---|---|---|
| 505 | 24A579 | MANIFOLD, medium, short | 1 |
| 506 | --- | GASKET, cover, small | 2 |
| 507† | --- | SEAL, air valve, manifold | 1 |
| 509† | --- | SCREW, m6 x 25, thread forming | 8 |
| 511 | 24R027 | VALVE, pilot | 2 |
| 512† | --- | VALVE, air, small | 1 |
| 513 | 15M213 | MUFFLER, 3/8 | 1 |

--- *Not for sale.*

† *Included in Air Motor Valve Kit 24R026.*

# Air Controls Assembly

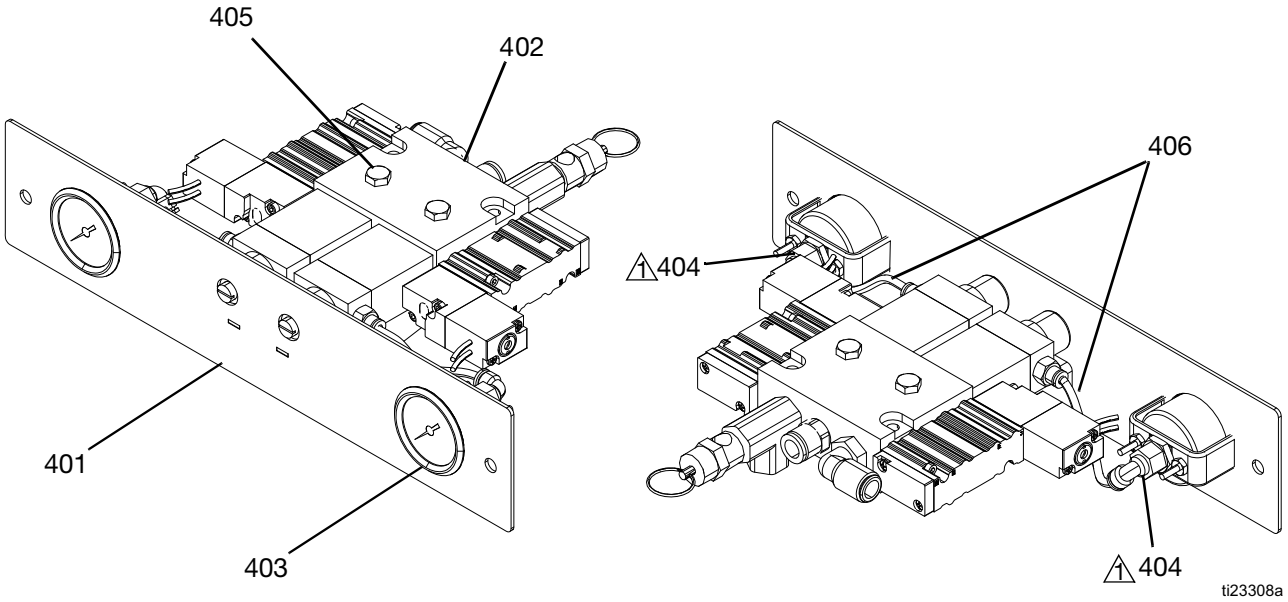


1 Apply sealant to all non-swiveling pipe threads.

**Air Controls Assembly Parts**

| Ref | Part | Description | Qty |
|---|---|---|---|
| 401 | --- | PANEL, air, controls | 1 |
| 402 | 24V520 | CONTROL, air, vacuum transfer and pump | 1 |
| 403 | 128260 | GAUGE, pressure, air, panel mount, 1/8 in. npt | 2 |
| 404 | 15T498 | FITTING, 90 degree, swivel, 5/32 in. tube x 1/8 in. female npt | 2 |
| 405 | 100058 | SCREW, cap, hex head | 2 |
| 406 | 054753 | TUBE, nylon, round, black | 2 |
| 407 | C38321 | TIE, cable, 3.62 in. | 1 |

*--- Not for sale.*

# Pressure Relief Valve, 24P856

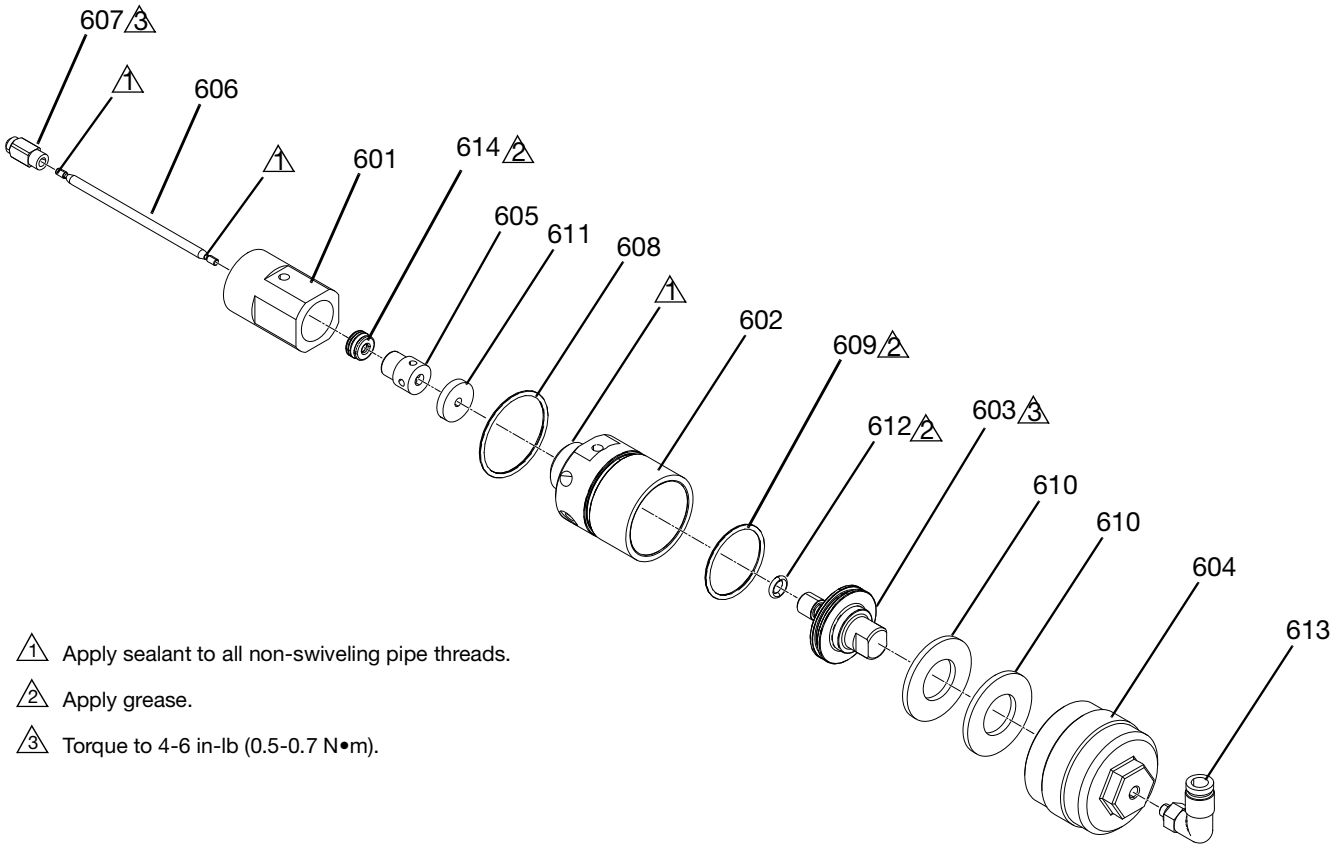


ti20926a

| Ref | Part | Description | Qty |
|---|---|---|---|
| 601 | --- | BODY, fluid | 1 |
| 602 | --- | BODY, air | 1 |
| 603 | 15T413 | PISTON, air | 1 |
| 604 | --- | AIR CAP, valve | 1 |
| 605 | --- | BEARING, shaft, needle | 1 |
| 606 | --- | SHAFT, needle, valve | 1 |
| 607 | --- | SOCKET, ball assembly | 1 |
| 608† | 108771 | PACKING, o-ring | 1 |
| 609† | 110073 | PACKING, o-ring | 1 |
| 610 | 111841 | WASHER, plain 5/8 in. | 2 |
| 611† | --- | BEARING, valve | 1 |
| 612† | --- | O-RING, FKM | 1 |
| 613 | 126474 | FITTING, push to connect | 1 |
| 614† | --- | SEAL, u-cup, relief valve | 1 |

*--- Not for sale.*

*† Parts included in Relief Valve Repair Kit 24P857 (purchase separately).*

# Feed Inlet Funnel, 24V505 HM25

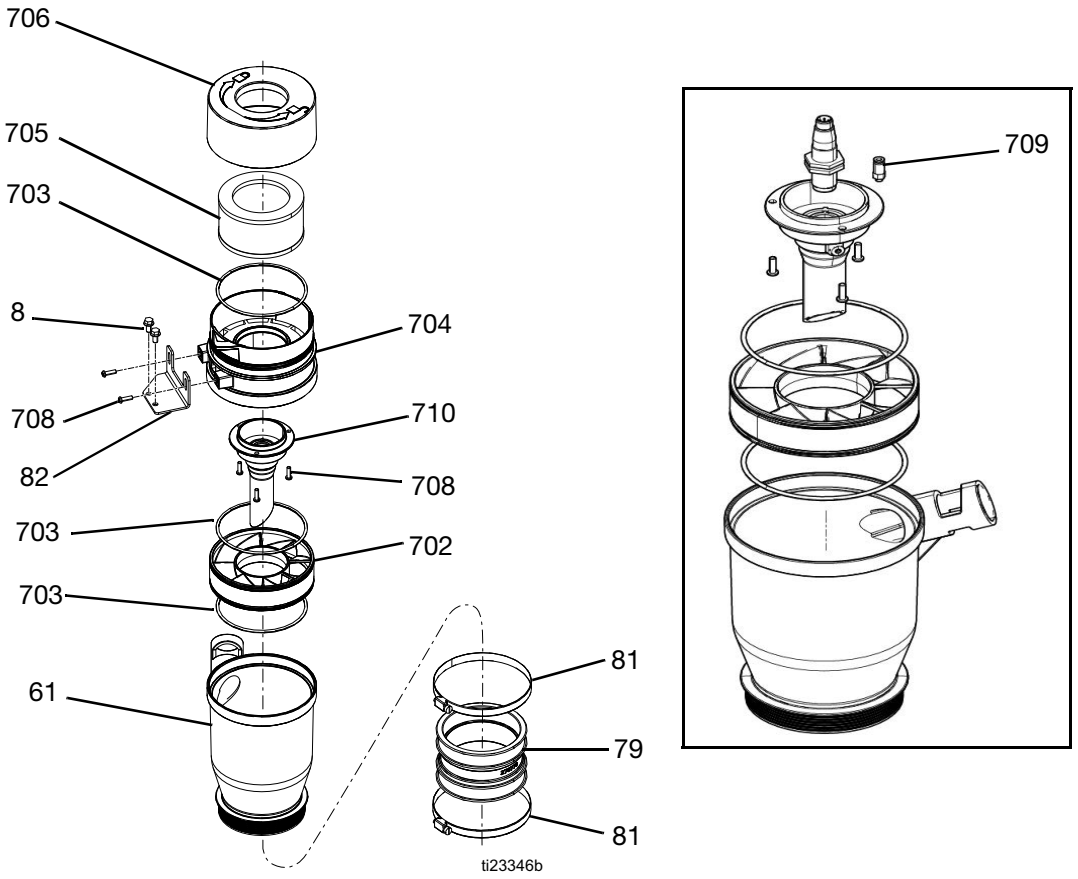


| Ref. | Part | Description | Qty |
|---|---|---|---|
| 702 | --- | BAFFLE, pellet | 1 |
| 703 | --- | O-RING, fluoroelastomer, 160 | 3 |
| 704 | --- | FUNNEL, insert | 1 |
| 705 | 24V506 | FILTER, feed | 1 |
| 706 | --- | FUNNEL, filter cover | 1 |
| 708 | 126901 | SCREW, #10-16, thread forming | 5 |
| 709 | 110932 | FITTING, connector, air | 1 |
| 710 | --- | HOUSING, sensor | 1 |
| 61 | --- | FUNNEL, large mouth | 1 |
| 79 | --- | ADAPTER, HM25 gen2 | 1 |
| 81 | --- | CLAMP, hose | 2 |

*--- Not for sale.Not included in 24V505:*

| Ref. | Part | Description | Qty |
|---|---|---|---|
| 8 | 113161 | SCREW, flange, hex hd | 2 |
| 82 | 17A492 | BRACKET, funnel, mounting, HM25 | 1 |
| | 16Y569 | BRACKET, funnel, mounting, HM50 | 1 |

# Feed Inlet Funnel, 25T368 HM50

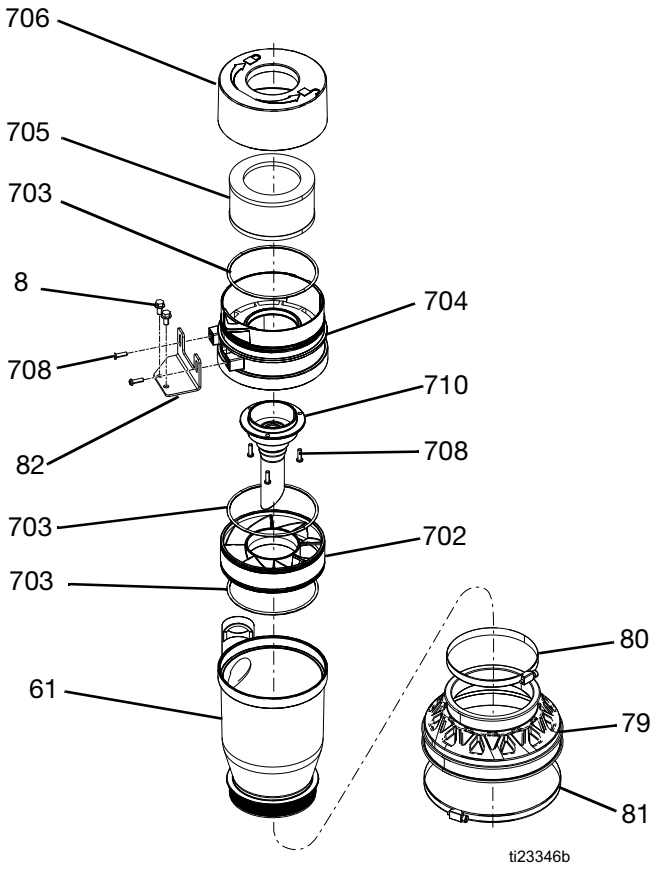


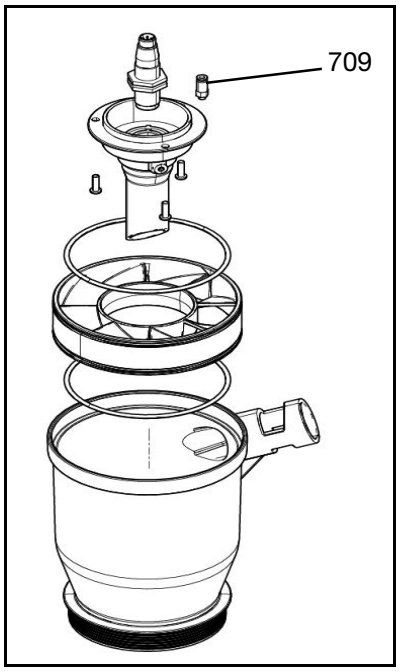


| Ref. | Part | Description | Qty |
|---|---|---|---|
| 702 | --- | BAFFLE, pellet | 1 |
| 703 | --- | O-RING, fluoroelastomer, 160 | 3 |
| 704 | --- | FUNNEL, insert | 1 |
| 705 | 24V506 | FILTER, feed | 1 |
| 706 | --- | FUNNEL, filter cover | 1 |
| 708 | 126901 | SCREW, #10-16, thread forming | 5 |
| 709 | 110932 | FITTING, connector, air | 1 |
| 710 | --- | HOUSING, sensor | 1 |
| 61 | --- | FUNNEL, large mouth | 1 |
| 79 | --- | ADAPTER, melter HM50 | 1 |
| 80 | --- | CLAMP, hose spacer | 1 |
| 81 | --- | CLAMP, hose spacer | 1 |

*--- Not for sale. Not included in 25T368:*

| Ref. | Part | Description | Qty |
|---|---|---|---|
| 8 | 113161 | SCREW, flange, hex hd | 2 |
| 82 | 17A492 | BRACKET, funnel, mounting, HM25 | 1 |
| | 16Y569 | BRACKET, funnel, mounting, HM50 | 1 |

# Accessories

## Special Tools

These special tools are designed to make system repairs as easy as possible while ensuring that parts do not get damaged.

| Part | Purpose |
|---|---|
| 1301* | Remove Cylinder |
| 1302* | Install Cylinder - Female |
| 1303* | Install Cylinder - Male |

* *Parts included in Cylinder Tools Kit 24R227 (purchase separately).*

| Part | Purpose |
|---|---|
| 1304** | Install Rod - Female |
| 1305** | Install Rod - Male |
| 1306** | Install Rod - Bullet |

** *Parts included in Rod Tools Kit 24R228 (purchase separately)*

| Part | Purpose |
|---|---|
| 1307† | Seal Install- Female |

† *Part included in Pump Assembly Repair Kit 24P852 (purchase separately).*

.

ti20983a

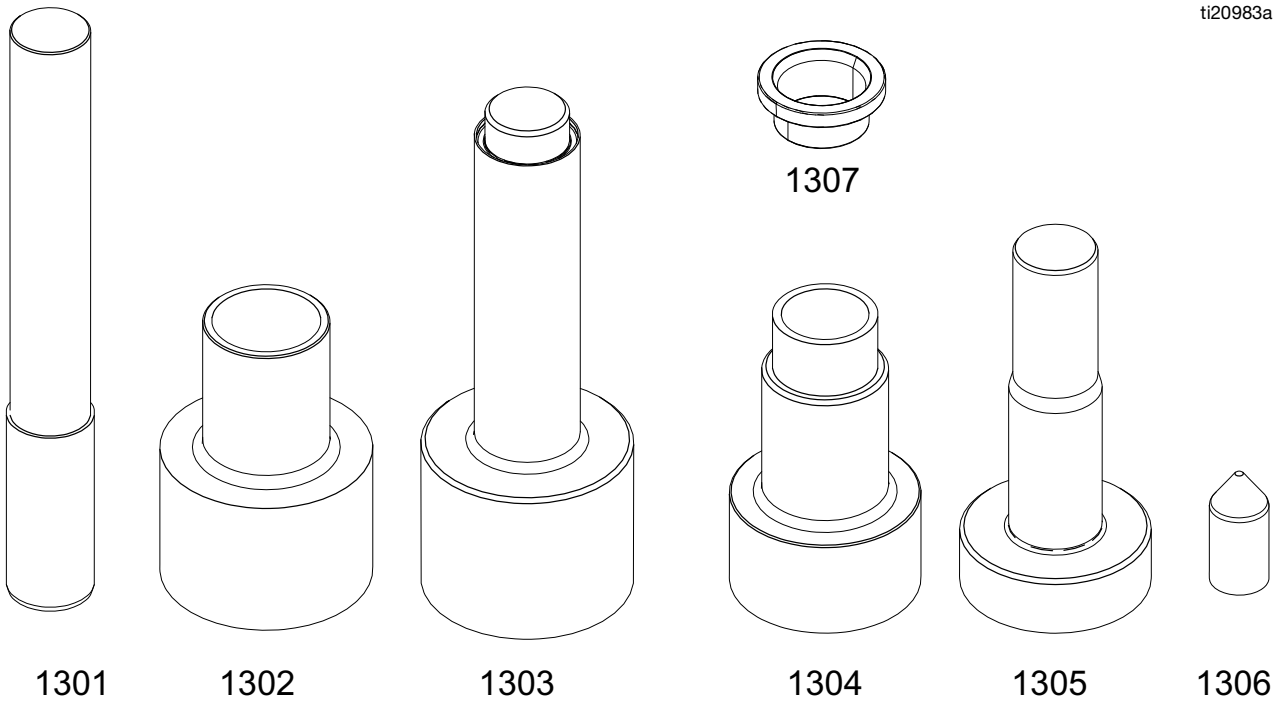

# Preventative Maintenance Kits

These kits contain components which are commonly used in maintenance.

**HM25 Generation 1 Preventative Maintenance Kit, 24X865**

| Ref | Part | Description | Qty |
|---|---|---|---|
| 1 | 24U701 | Kit, Foam, Screen, Funnel | 1 |
| 2 | 24W595 | Kit, Filter Rebuild | 2 |
| 3 | 24X967 | Filter, Repair | 2 |
| 5 | 24P802 | Kit, Filter, Gun, 80 Mesh, 3pk | 4 |

**HM25 Generation 2 Preventative Maintenance Kit, 24X867**

| Ref | Part | Description | Qty |
|---|---|---|---|
| 1 | 24V506 | Kit, Filter, Feed | 2 |
| 2 | 24W595 | Kit, Filter Rebuild | 2 |
| 3 | 24X967 | Filter, Air, Repair | 2 |
| 5 | 24P802 | Kit, Gun Filter, 80 Mesh, 3pk | 4 |

**HM50 Preventative Maintenance Kit, 24X868**

| Ref | Part | Description | Qty |
|---|---|---|---|
| 1 | 24V506 | Kit, Filter, Feed | 2 |
| 2 | 24W595 | Kit, Filter Rebuild | 2 |
| 3 | 24X967 | Filter, Air, Repair | 2 |
| 5 | 24P802 | Kit, Gun Filter, 80 Mesh, 3pk | 4 |

# Complete Maintenance Kits

These kits contain repair components which are not part of regular preventative maintenance.

**HM25 Complete Maintenance Kit, 24X869**

| Ref | Part | Description | Qty |
|---|---|---|---|
| 1 | 24P856 | Kit, Valve, Discharge | 1 |
| 2 | 24P861 | Kit, Shaker, Feed | 1 |
| 3 | 24R027 | Kit, Poppet | 1 |
| 4 | 24R026 | Kit, Valve, Motor | 1 |
| 5 | 24R041 | Kit, Level Sensor | 1 |
| 6 | 24P852 | Kit, Repair, Pump | 1 |
| 7 | 24V816 | Kit, Repair, AWB | 1 |
| 8 | 24R042 | Kit, Board, Daught. | 1 |
| 9 | 24R885 | Kit, Cycle Switch | 1 |
| 10 | 24V510 | Kit, MZLP w/ fuses | 1 |
| 11 | 24V289 | Kit, Fuses, MZLP | 1 |
| 12 | 24R039 | Kit, Band Heater | 1 |
| 13 | 24R037 | Kit, 1.5kW Heat Rod | 1 |
| 14 | 24R034 | Kit, 500W Heat Rod | 1 |
| 15 | 126453 | Power Supply, 24V | 1 |
| 16 | 24R040 | Kit, Harness, RTD | 1 |
| 17 | 127411 | Jumper, OT | 1 |
| 18 | 25C448 | Kit, Heat Rod Base, 1500W | 1 |

**HM50 Complete Maintenance Kit, 24X870**

| Ref | Part | Description | Qty |
|---|---|---|---|
| 1 | 24P856 | Kit, Valve, Discharge | 1 |
| 2 | 24P861 | Kit, Shaker, Feed | 1 |
| 3 | 24R027 | Kit, Poppet | 1 |
| 4 | 24R026 | Kit, Valve, Motor | 1 |
| 5 | 24R041 | Kit, Level Sensor | 1 |
| 6 | 24P852 | Kit, Repair, Pump | 1 |
| 7 | 24V816 | Kit, Repair, AWB | 1 |
| 8 | 24R042 | Kit, Board, Daught. | 1 |
| 9 | 24R885 | Kit, Cycle Switch | 1 |
| 10 | 24V510 | Kit, MZLP w/ fuses | 1 |
| 11 | 24V289 | Kit, Fuses, MZLP | 1 |
| 12 | 24V522 | Kit, Band Heater | 1 |
| 13 | 25C445 | Kit, Heat Rod, 1000W | 1 |
| 14 | 25C449 | Kit, Heat Rod, HM50 Melt, 1500W | 1 |
| 15 | 126453 | Power Supply, 24V | 1 |
| 16 | 24R040 | Kit, Harness, RTD | 1 |
| 17 | 127411 | Jumper, OT | 1 |
| 18 | 25C446 | Kit, Pump Heat Rod, 1000W | 1 |

# Non-Graco Applicator Adapter Cables

**16T916:** For connecting to non-Graco applicators that use a rectangular, 6-pin connector.

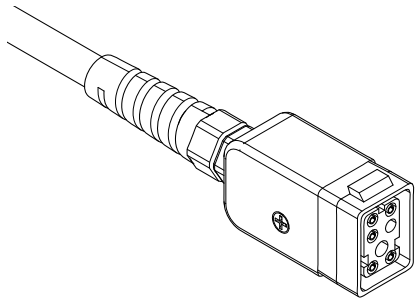

ti21128a

**16T917:** For connecting to non-Graco applicators that use a circular, 9-pin connector.

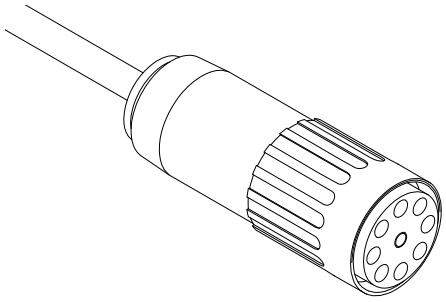

ti21129a

**16Y828:** For connecting to non-Graco applicators that use a circular, 6-pin connector. IPx6 rated.

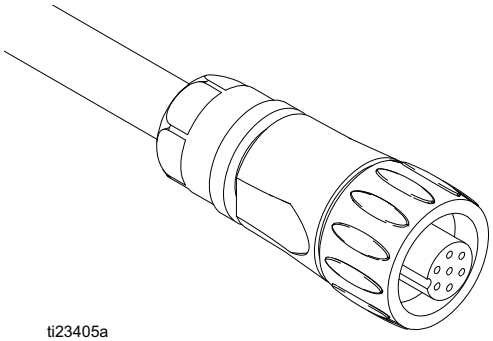

ti23405a

## Adapter Cable

**128621:** Adapter cable allows non-Graco NI120 RTD Hoses to be used on InvisiPac.

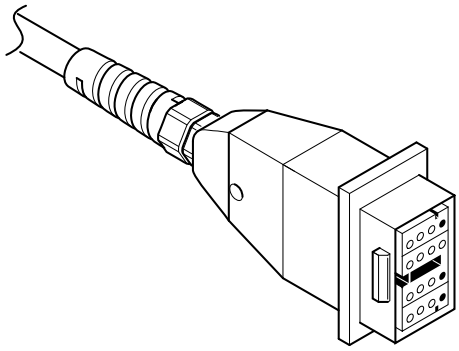

ti30742a

**128372:** For connecting to non-Graco applicators that use a rectangular 8-pin connector.

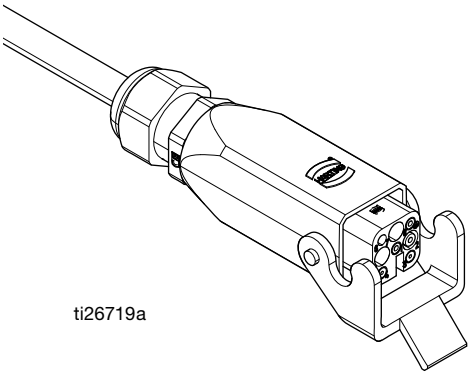

ti26719a

## Non-Graco Applicator Adapter Cable Installation

See **Attach Components** on page 18.

# Air Adjustment Lock, 24R084

Panel enables locking access to the air adjustment screws.

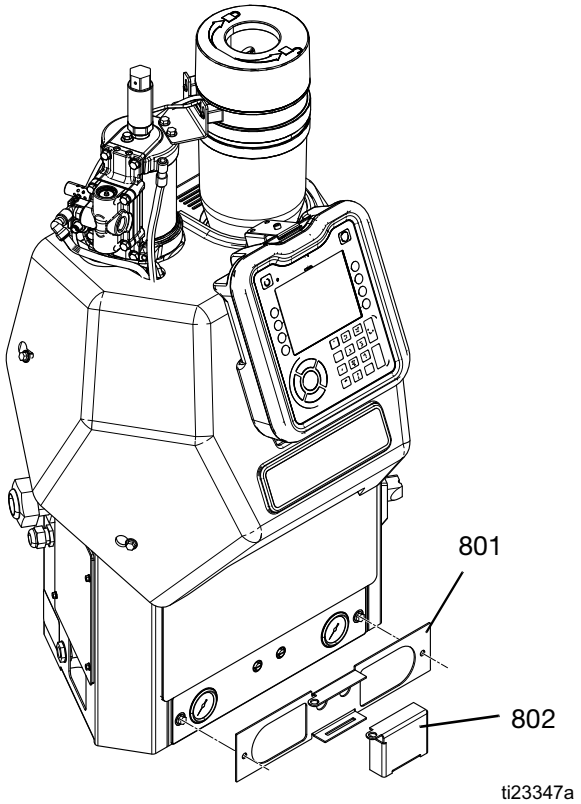


Screws are part of the base system and are not included in the kit.

| Ref | Part | Description | Qty |
|---|---|---|---|
| 801 | --- | PANEL, lock, air control | 1 |
| 802 | --- | BRACKET, lock, air control | 1 |

## Air Adjustment Lock Installation

1. Remove screws from system air panel.
2. Use screws to install panel (801).
3. Snap bracket (802) into panel (801).
4. Insert lock through hole in panel and bracket to lock access to the air controls. Lock not included in kit.

# Feed Sensor Dedicated Air Kit, 17F699

For connecting a dedicated air source to the feed sensor on InvisiPac™ systems.

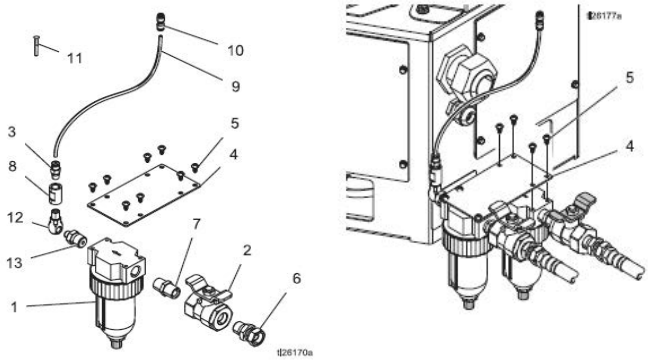


| Ref | Part | Description | Qty |
|---|---|---|---|
| 1 | 106148 | FILTER, air, 3/8 npt | 1 |
| 2 | 110224 | VALVE, vented 2-way | 1 |
| 3 | 198177 | FITTING, push, straight | 1 |
| 4 | 128264 | BRACKET | 1 |
| 5 | 128277 | SCREW, self-tap, 10-24 x 3/8 | 8 |
| 6 | 155665 | UNION, adapter | 1 |
| 7 | 167702 | NIPPLE, pipe | 1 |
| 8 | 16T779 | RESTRICTOR, air, 0.0225 in. orifice | 1 |
| 9 | 598095 | TUBE, 5/32 in. OD, nylon; 3 ft (1 m) | 1 |
| 10 | 127660 | FITTING, 5/32 in. OD tube, push-to-connect | 1 |
| 11 | 128292 | PLUG, push-to-connect, 5/32 | 1 |
| 12 | 191892 | FITTING, elbow, street, 90° | 1 |
| 13 | C20467 | FITTING, nipple, reducing; 1/8-27 npt x 3/8-18 npt | 1 |
| 14 | 110110 | SEALANT, pipe, sst; 6 ml | 1 |

## Feed Sensor Dedicated Air Source Installation

1. Assemble parts in kit. Apply sealant (14) to all threaded joints.
2. Mount bracket to the InvisiPac system air inlet filter.
3. Disconnect level sensor cooling air tubes.
4. Insert plug (11) into tube coming from under the InvisiPac system shroud to prevent the system from losing air pressure.
5. Connect connector (1) to the tube (9) coming from the kit.
6. Rout tube (9) as needed and cut to length.
7. Connect dedicated air supply to the auxiliary air inlet (6).

# System Stand, 24R088

Use the stand to mount the system at eye level. When the system is mounted on the stand, the ADM is 45 in. (1.14 m) above the bottom of the stand.

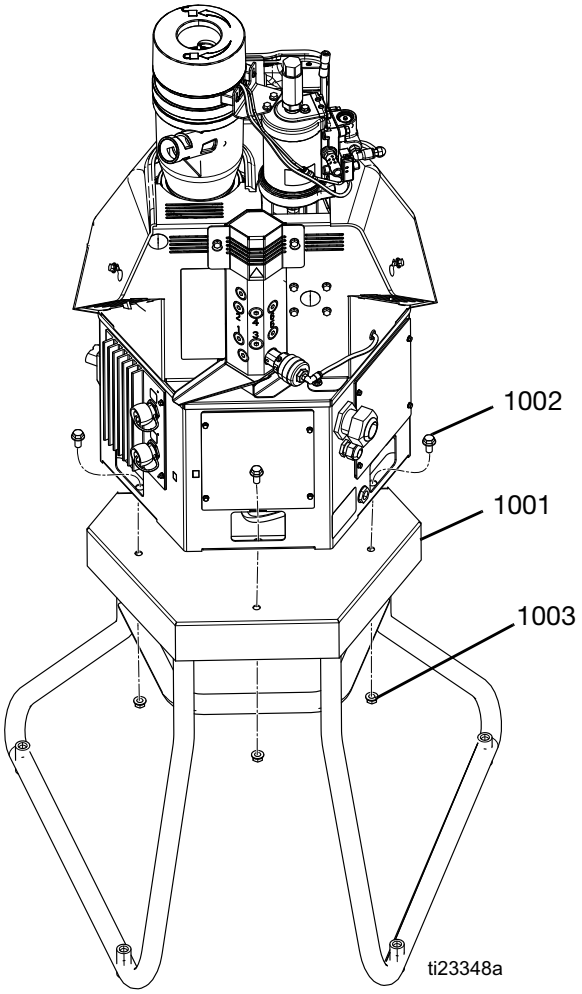


| Ref | Part | Description | Qty |
|---|---|---|---|
| 1001 | --- | STAND | 1 |
| 1002 | 112395 | SCREW flange head cap | 3 |
| 1003 | 112958 | NUT, hex, flanged | 3 |

## System Stand Installation

1. Place stand (1001) in desired location.
2. Use bolt holes to bolt stand in place.
3. Place system on stand.
4. Use screws and nuts to secure system to stand.

# Caster for Stand, 120302



Caster with friction post mounts directly to system stand using no extra hardware. Four required. Casters raise stand an additional 4.25 in. (108 mm).

# Adapter Plate, 24R083

Use this adapter plate to install InvisiPac in place of an existing hot melt applicator system.

**Bolt Hole Dimensions**

A 9.8 in. (249 mm)
B 14.843-15.157 in. (377.0-385.0 mm)
C 17.003-17.317 in. (431.9-439.9 mm)

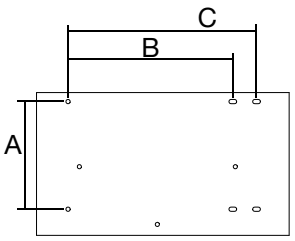


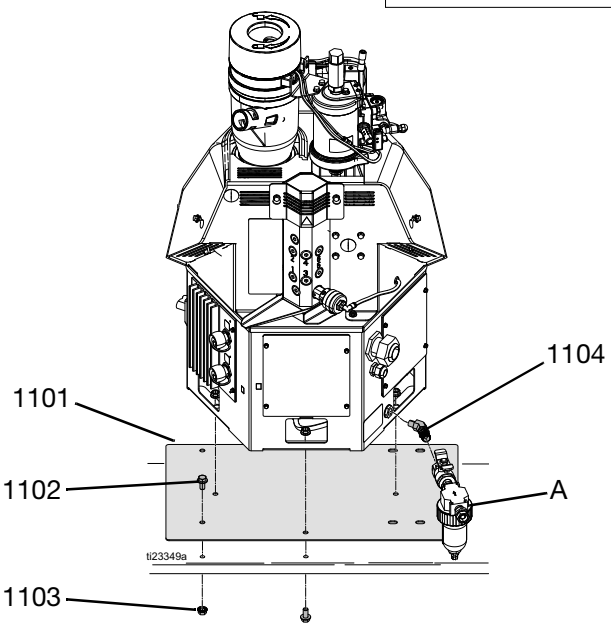


| Ref | Part | Description | Qty |
|---|---|---|---|
| 1101 | --- | PLATE, adapter | 1 |
| 1102 | 112395 | SCREW flange head cap | 6 |
| 1103 | 112958 | NUT, hex, flanged | 9 |
| 1104 | 121283 | FITTING, elbow, 45 degree | 1 |

## Adapter Plate Installation

1. Remove existing hot melt applicator system.
2. Use six screws (1102) and six nuts (1103) to secure adapter plate (1101) through the existing holes from the previous system.
3. Align the InvisiPac system with the bolts on the adapter plate (1101) then place onto the adapter plate (1101).
4. Use the remaining three nuts (1103) to secure the InvisiPac system to the adapter plate (1101).
5. Use elbow fitting (1104) to install system air inlet filter (A, not included with kit).

# Light Tower Kit, 24R226

The light tower enables someone away from the system to quickly see whether the system is inactive or OFF (no lights), warming up (flashing green), at temperature (solid green), or has an active error (red).

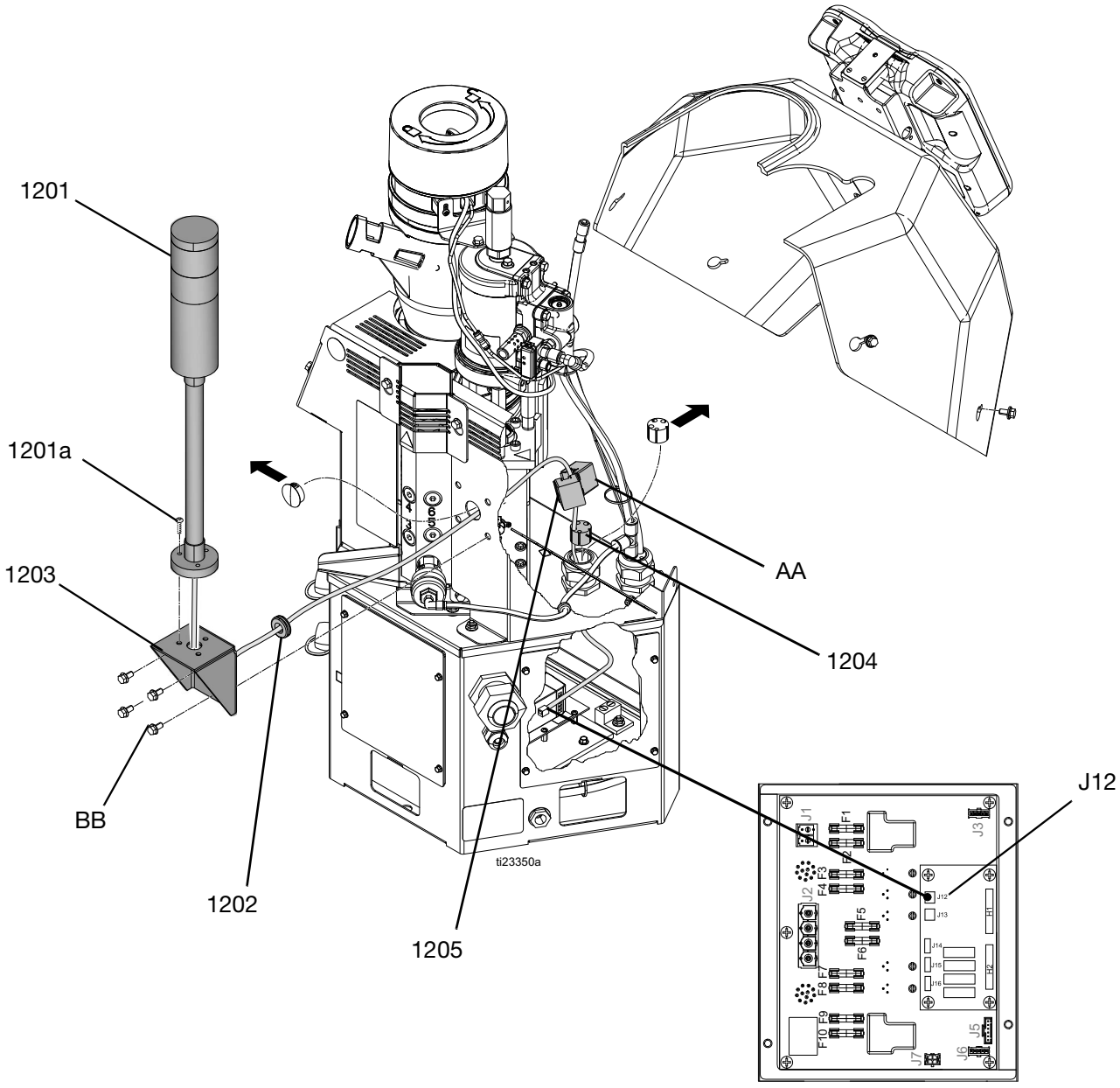


**24R226 Parts**

| Ref | Part | Description | Qty |
|---|---|---|---|
| 1201 | 16T102 | LIGHT, tower, red and green | 1 |
| 1201a | --- | SCREW | 3 |
| 1202 | --- | GROMMET, single cable | 1 |
| 1203 | 16K322 | BRACKET, light tower | 1 |
| 1204 | --- | GROMMET, multiple wires | 1 |
| 1205 | 125835 | CLIP, ferrite bead | 1 |

*--- Not for sale.*

## Light Tower Kit Installation



**DANGER**

**SEVERE ELECTRIC SHOCK HAZARD**

This equipment can be powered by more than 240 V. Contact with this voltage will cause death or serious injury. Turn off and disconnect all power before disconnecting any cables and before servicing equipment.



1. Turn main power switch OFF.
2. Disconnect cable from ADM, push cable through plastic shroud, then remove shroud from system.
3. Remove existing grommet (AA) from electrical enclosure then install new grommet (1204) in its place.
4. Insert grommet (1202) into hole on the light tower bracket (1203).
5. Remove bolts (BB) from metal shroud on the system then use the bolts (BB) to secure bracket (1203) to metal shroud.
6. Route light tower cable through hole in bracket (1203) then use supplied light tower screws (1201a) to install light tower (1201).
7. Remove electrical enclosure front access door.
8. Route light tower cable through the other hole in the bracket (1203), then through the grommet (1204) into the electrical enclosure.
9. Connect light tower cable to MZLP connector labeled J12.

# Air Reservoir Kit, 16W366

This kit allows the system to operate as low as 60 psi (0.4 MPa, 4 bar).

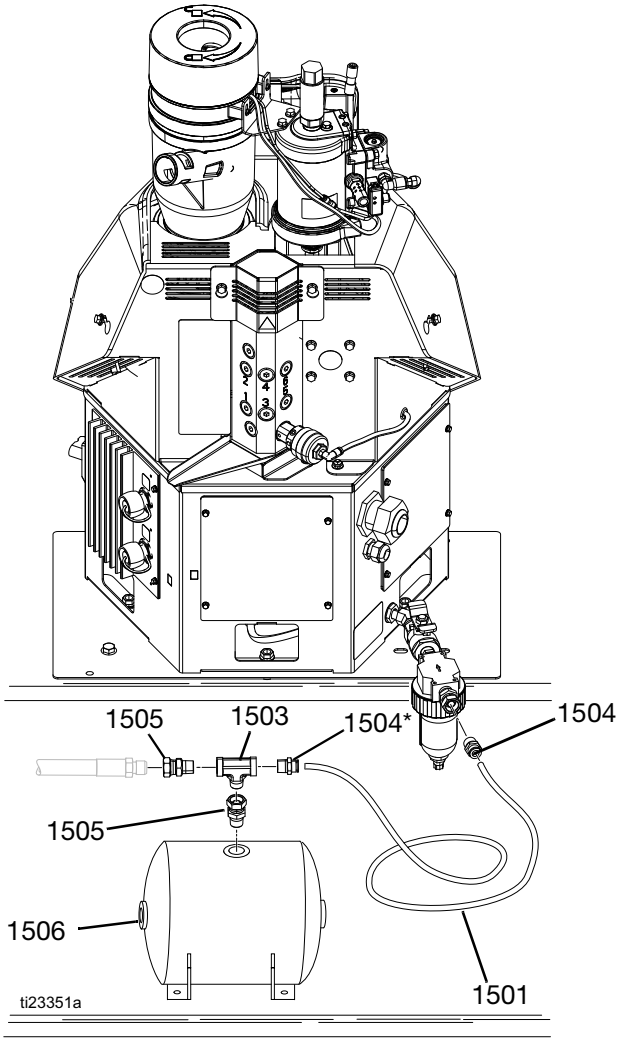


**16W366 Parts**

| Ref | Part | Description | Qty |
|---|---|---|---|
| 1501 | --- | HOSE, nylon (6 ft) | 1 |
| 1502 | 100081 | BUSHING, pipe | 1 |
| 1503 | 113777 | TEE, branch | 1 |
| 1504* | 114485 | CONNECTOR, male, 3/8 npt | 2 |
| 1505 | 155665 | UNION, adapter | 1 |
| 1506 | --- | TANK, air, accumulator | 1 |

*--- Not for sale.*

* *Metric fitting included in **Air Metric Fitting Kit, 24W637**, page 124.*

# 4 Channel Upgrade Kit, 24V528

Use this kit to upgrade a 2 channel system to a 4 channel system.

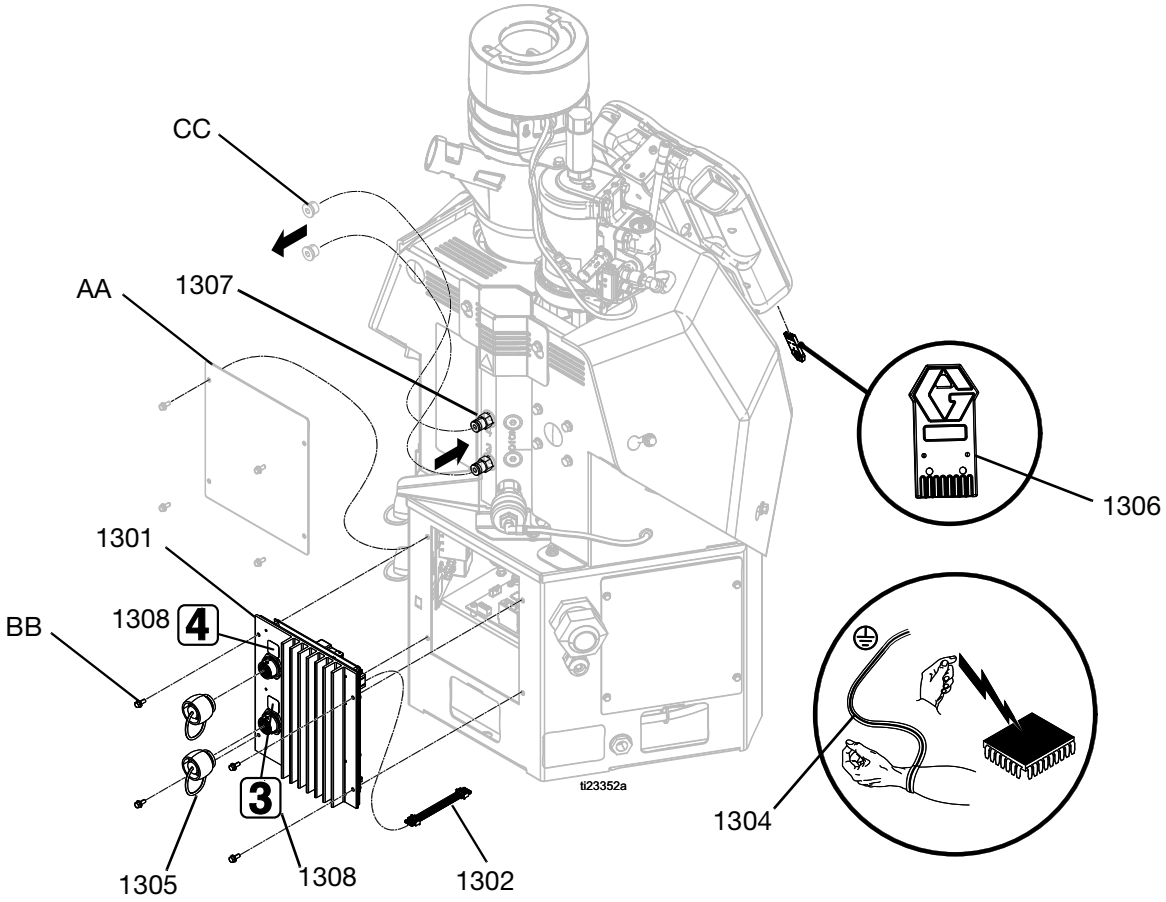


◆ *Not shown.*

| Ref | Part | Description | Qty |
|---|---|---|---|
| 1301 | --- | MODULE, GCA, MZLP | 1 |
| 1302 | 16T087 | CABLE, jumper, male/male, 21 in. | 1 |
| 1303 | --- | HARNESS, 2nd MZLP power | 1 |
| 1304 | 112190 | STRAP, wrist, grounding | 1 |
| 1305 | 16T440 | CAP, jam nut, sealing | 2 |
| 1306 | 24R324 | SOFTWARE UPGRADE TOKEN, InvisiPac System | 1 |
| 1307 | 24P615 | FITTING, straight | 2 |
| 1308 | --- | LABEL, InvisiPac Channel Numbers | 1 |

## 4 Channel Upgrade Kit Installation



**DANGER**
**SEVERE ELECTRIC SHOCK HAZARD**
This equipment can be powered by more than 240 V. Contact with this voltage will cause death or serious injury. Turn off and disconnect all power before disconnecting any cables and before servicing equipment.



1. Disconnect plug from power outlet or turn off circuit breaker for incoming power.
2. Place grounding wrist strap (1304) over your wrist and secure other end to a grounded surface.
3. Set the MZLP (1301) rotary switch to “2”.
4. Remove screws (BB) then remove plate (AA) from system.
5. Use screws (BB) to install MZLP (1301) onto system. Apply labels from label sheet (1308) to MZLP #2. Place the “3” and “4” labels as shown in parts illustration.

The new MZLP (1301) with be referred to as MZLP 2, and the original MZLP that came with the system will be referred to as MZLP 1 from here on. See FIG. 1.

6. Remove electrical enclosure front access door.

Do not force the electrical connection. Minimal force is required to seat the connector. If resistance is felt, stop and verify the connector orientation. Verify the connector has “Locked” by gently pulling on the white connector housing.

7. Connect CAN jumper cable (1302) to MZLP 1 connector J3 and connect other end of jumper cable (1302) to MZLP 2 connector J6. See FIG. 1.
8. Connect power harness (1303) to MZLP 2 connector J2.
9. Remove plugs (CC) from fluid manifold and replace with straight fittings (1307) or the extra fittings included with the InvisiPac system. Use the fittings that meet your hose routing needs.
10. To ensure your InvisiPac system has the latest software, insert token (1306) into ADM. Follow **Software Update Procedure**, page 84.

*Step 7: Install Jumper Cable (1302).*

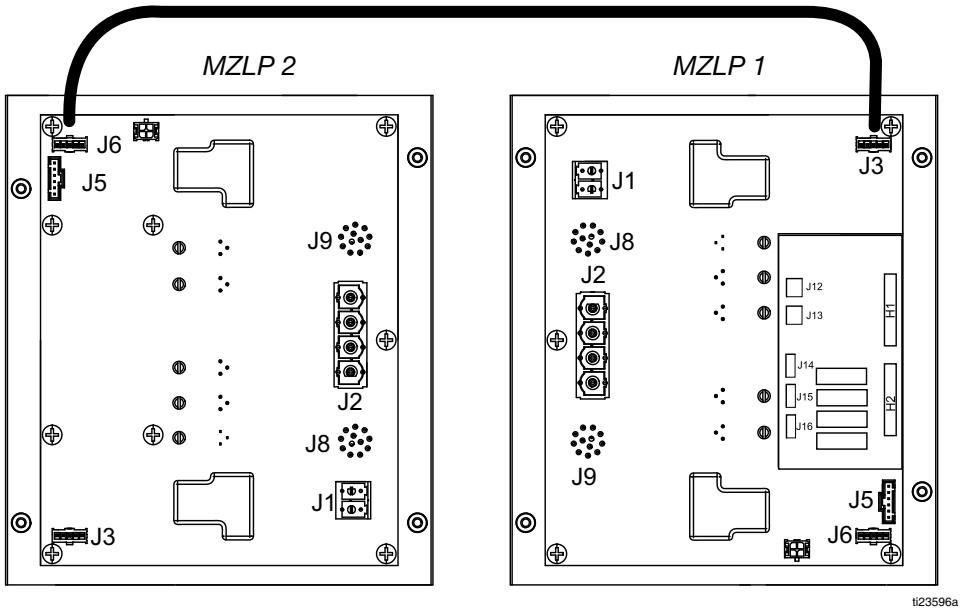


**FIG. 1**

# 6 Channel Upgrade Kit, 24V529

Use this kit to upgrade a 4 channel system to a 6 channel system.

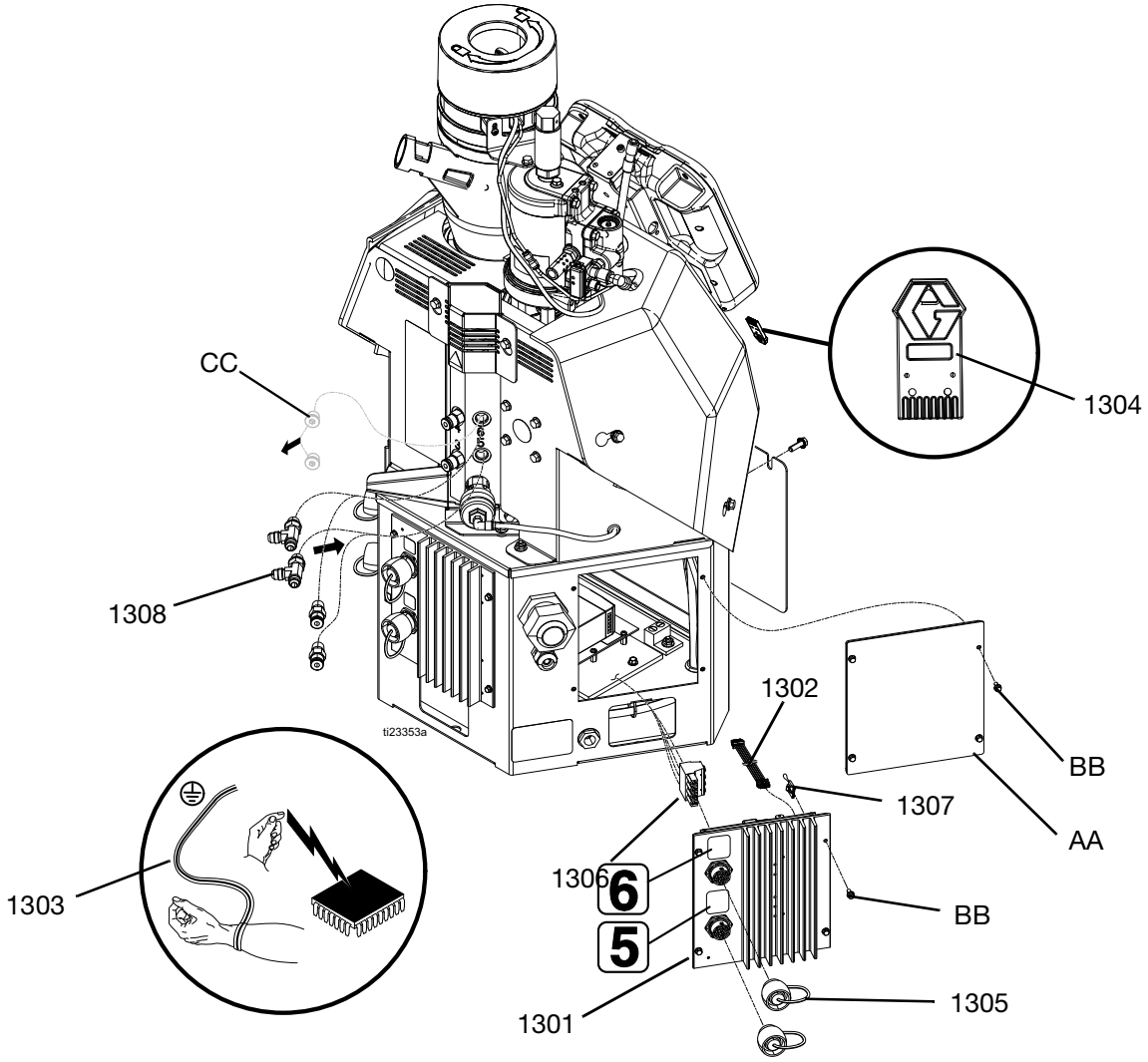


| Ref | Part | Description | Qty |
|---|---|---|---|
| 1301 | --- | MODULE, GCA, MZLP | 1 |
| 1302 | 16T087 | CABLE, jumper, male/male, 4 in. | 1 |
| 1303 | 112190 | STRAP, wrist, grounding | 1 |
| 1304 | 24R324 | TOKEN, software upgrade | 1 |
| 1305 | 16T440 | CAP, jam nut, sealing | 2 |
| 1306 | --- | HARNESS, MZLP #3 | 1 |
| 1307 | 16W035 | CONNECTOR, jumper | 1 |
| 1308 | 127208 | FITTING, tee | 2 |
| 1309 | | | |

## 6 Channel Upgrade Kit Installation



**DANGER**

**SEVERE ELECTRIC SHOCK HAZARD**

This equipment can be powered by more than 240 V. Contact with this voltage will cause death or serious injury. Turn off and disconnect all power before disconnecting any cables and before servicing equipment.



1. Disconnect plug from power outlet or turn off circuit breaker for incoming power.
2. Place grounding wrist strap (1303) over your wrist and secure other end to a grounded surface.
3. Set the kit's MZLP (1301) rotary switch to "3".
4. Remove screws (BB) then remove plate (AA) from system.
5. Use screws (BB) to install MZLP (1301) onto system.

The new MZLP (1301) will be referred to as MZLP 3, and the original MZLPs that came with the system will be referred to as MZLP 1 and MZLP 2 from here on. See FIG. 2.

6. Remove electrical enclosure front access door.

**NOTE:** Do not force the electrical connection. Minimal force is required to seat the connector. If resistance is felt, stop and verify the connector orientation. Verify the connector has "Locked" by gently pulling on the white connector housing.

7. Connect CAN jumper cable (1302) to MZLP 2 connector J3 and connect other end of jumper cable (1302) to MZLP 3 connector J3. See FIG. 2.
8. Install jumper connector (1307) in J5 on MZLP 3.
9. Connect wires from power harness (1306) between AWB connector J5 and MZLP connector J2.
10. Remove plugs (CC) from fluid manifold and replace with straight fittings (1309), tee fittings (1308), or the extra fittings included with the InvisiPac system. Use the fittings that meet your hose routing needs.
11. To ensure your InvisiPac system has the latest software, insert token (1306) into ADM. Follow **Software Update Procedure**, page 84.

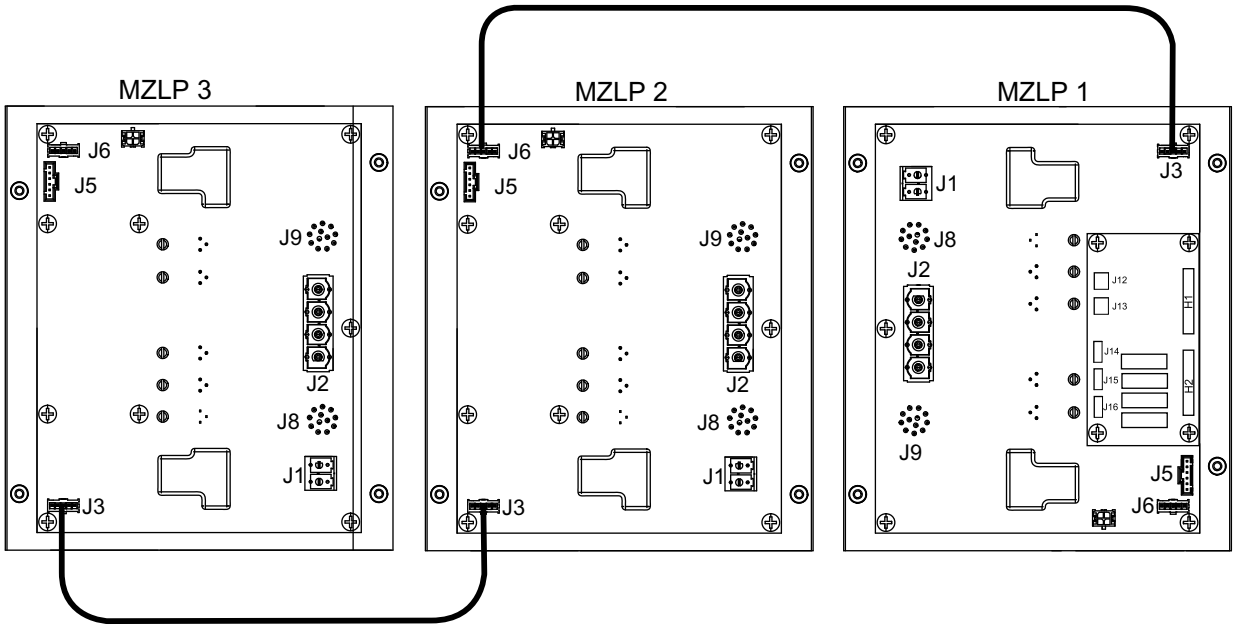


*Step 7: Install jumper cable (1302).*

ti23597a

**FIG. 2**

# InvisiPac ADM Simulator Kit, 24R323

Use this kit to train users in ADM operation without using the full InvisiPac system. Kit includes everything necessary to simulate the ADM screens. Does not include an InvisiPac system.

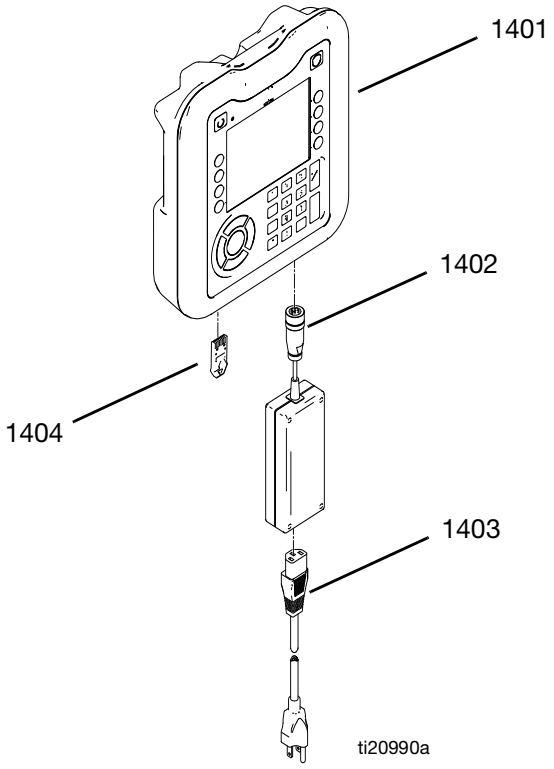


| Ref | Part | Description | Qty |
|---|---|---|---|
| 1401 | 24P860 | MODULE, Advanced Display (ADM) | 1 |
| 1402 | 124149 | POWER SUPPLY, GCA | 1 |
| 1403 | --- | CORD SET, US, MX, PR, CA, TW, 115V, 10A | 1 |
| 1404 | 24R322 | TOKEN, InvisiPac Simulator | 1 |
| 1405 | 24R324 | SOFTWARE UPGRADE TOKEN, InvisiPac System | 1 |

### Simulator Instructions

1. Remove ADM access panel and install InvisiPac Simulator Token (1404).

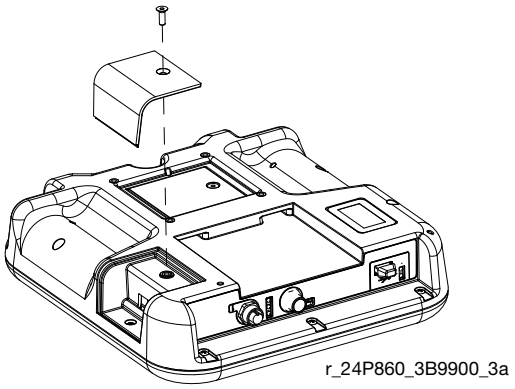


**FIG. 3: Remove Access Panel**

2. Connect power supply (1402) to ADM (1401).
3. Connect cord (1403) to power supply (1402).
4. Perform **Software Update Procedure** on page 84.

## ADM Extension Kits

Use the extension cables to remote mount the ADM display off of the InvisiPac system. Kits available separately.

| Kit No. | Cable Length | Qty. |
|---|---|---|
| 24R710 | 16.4 ft (5 m) | 1 |
| 24R711 | 49.2 ft (15 m) | 1 |
| 24R712 | 164 ft (50 m) | 1 |

## ADM Remote Mount Bracket, 24A326

This bracket is used to remote mount the ADM display, along with an ADM extension cable.

| Ref. | Part | Description | Qty. |
|---|---|---|---|
| 1 | | BRACKET, mounting assembly | 1 |

## Overtemperature Jumper, 16Y727

Use the Overtemperature jumper plug to run the InvisiPac melter without a hose and applicator attached to the Channel 1 electrical connection.

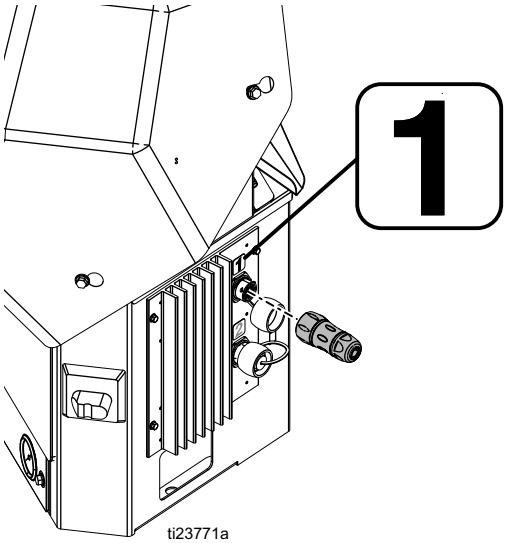


#### Installation

1. In the ADM setup screens, uninstall Channel 1. All other Channels can be installed or uninstalled as needed.

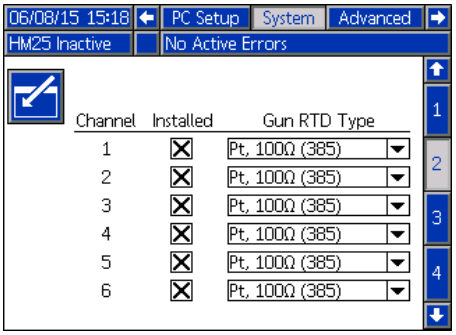


Failure to uninstall Channel 1 on the ADM setup screens will result in several Alarms regarding Channel 1 when there is no hose/applicator attached to Channel 1.

2. Attach the Overtemperature jumper plug to Channel 1.
3. The ADM should have zero Active Alarms. The melter is now ready to run without a hose and applicator attached to Channel 1.

## Air Metric Fitting Kit, 24W637

For replacing air fittings with metric air fittings on InvisiPac systems. See manual 334358 for installation instructions.

| Ref. | Part | Description | Qty. |
|---|---|---|---|
| 1 | 127922 | FITTING, 3/8 npt(m) x M18(f) | 1 |
| 2 | 127923 | FITTING, 1/4 npt(m) x 10 mm tube | 1 |
| 3 | 127924 | FITTING, 1/4 npt(m) x 10 mm 90° elbow tube | 1 |
| 4 | 127925 | FITTING, 3/8-18 npt (m) x 3/8-19 bspt (f) | 1 |

## Strain Relief Bushing Kit, 24X190

The strain relief bushing kit allows the use of a smaller outside diameter (OD) power cord. This strain relief bushing is intended for power cords with an OD of 0.512-1.024 in (13-26 mm).

### Installation

1. Remove standard strain relief bushing (106). Retain and reuse nut.
2. Install strain relief bushing from kit and secure with retained nut.

## Hose Straps (4 Pack), 240296

Use these straps to secure hoses without excessive pinching.

| Ref. | Part | Description | Qty. |
|---|---|---|---|
| 1 | 114271 | STRAP, retaining | 4 |

## Pressure Gauge Replacement Kit, 24U635

To replace the air gauge glass lenses and glass fuses used in the food or beverage industries.

| Ref. | Description | Qty. |
|---|---|---|
| 1 | GAUAGE, pressure, acrylic | 2 |
| 2 | TOOL, puller, fuse | 1 |
| 3 | FUSE, 250v, 8a | 32 |

## 400VAC and 480VAC Transformer Kits

Use one of these kits to transform higher voltage power (400VAC or 480VAC) to 240VAC.

| Kit | Description |
|---|---|
| 127567 | KIT, 400VAC Transformer |
| 127568 | KIT, 480VAC Transformer |

## Adapter Cable

| Part | Description |
|---|---|
| 128621 | Adapter cable allows non-Graco Ni120 RTD Hoses to be used on InvisPac |

# Appendix A - ADM

## General Operation

### ADM Power

The ADM automatically turns on when the main power switch is turned ON.

### Screen Navigation

To switch between the Setup and Operation screens, press . Use , , , and  to navigate between screens.

**NOTE:** For information on InvisiPac Pattern Controller screens, see manual 334784.

### Enable, Disable Heating System

To enable or disable the entire heating system, press . To set which channels are active when the heating system is enabled, use the System 2 screen. See page 130.

## Icon Identification

| Icon | Description |
|---|---|
| **Operation Screens Only** | |
|  | Heating disabled |
|  | Warming up, actual temperature is below setting |
|  | Temperature setting achieved |
|   | Actual temperature of hose (left) and applicator (right) |
|   | Actual temperature of system (shown warming up) |
|   | System temperature setting.<br>Use  and  to adjust setting. |

| Icon | Description |
|---|---|
|  | Use the physical numeric keypad on ADM to enter temperature setting. |
|   | Select channel to view and/or edit the applicator or hose temperature setting |
|  350 °F | Applicator temperature setting.<br>Use  and  to adjust setting. |
|  350 °F | Hose temperature setting. Use  and  to adjust setting. |
| 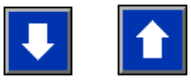 | Use to adjust temperature settings |
| 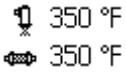  | Temperature settings of applicator (top) and hose (bottom) |
|   | Reset weight total |
|  | Reset material target |
| **Setup Screens Only** | |
|  | Enter screen to change settings |
|  | Exit screen |
|   | Reset Maintenance error |

| Icon | Description |
|---|---|
| **Schedule Screen Only** | |
|  | Edit schedule value |
|  | Erase schedule value |
|  | Accept schedule change |
|  | Cancel schedule change |

# Operation Screens

### Home

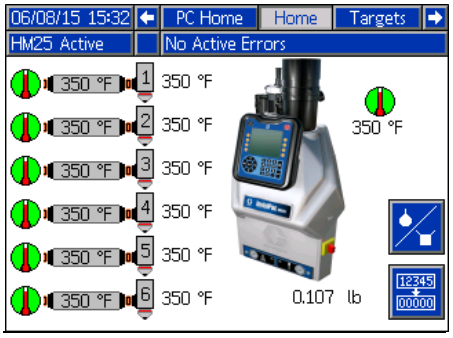


This screen shows the actual temperatures of the system melter and each applicator and hose.

### Targets

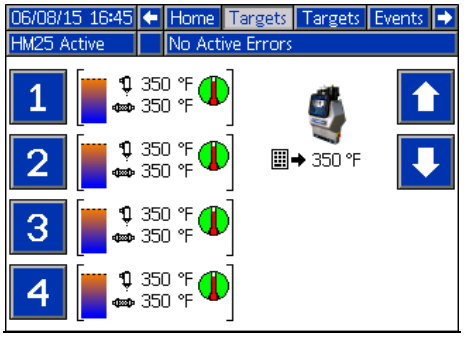


This screen shows and allows editing of the temperature settings for the system melter and each applicator and hose. See **Select ADM Settings** on page 24.

### Events

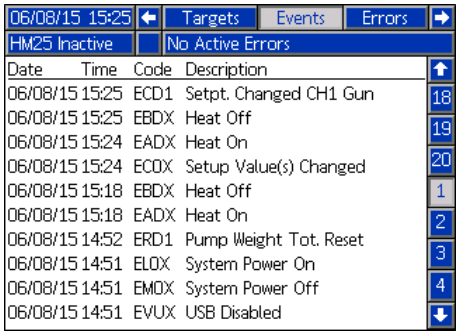


The Events screens store a maximum of 200 events. The events list can be downloaded in the USB logs.

See **Appendix B - USB Downloading, Uploading** on page 133.

| Tracked Events | Code |
|---|---|
| Custom Language Downloaded | EQU3 |
| Custom Language Uploaded | EQU4 |
| Fill Valve Closed | EBFX |
| Fill Valve Open | EAFX |
| Heat Off | EBDX |
| Heat On | EADX |
| High Material Usage | ECAH |
| Logs Downloaded | EQU5 |
| Low Material Usage | ECAL |
| Material Target Reset | ERM1 |
| Pump Cycles Total Reset | ERD1 |
| Pump Off | EBPX |
| Pump On | EAPX |
| Red Stop Button Pressed | EB0X |
| Setup Value Changed | EC0X |
| System Power Off | EM0X |
| System Power On | EL0X |
| System Settings Downloaded | EQU1 |
| System Settings Uploaded | EQU2 |
| USB Disabled | EVUX |
| USB Drive Inserted | EAUX |
| USB Drive Removed | EBUX |
| User Maintenance Count Reset | ERN1 |

* *Zone*

### Errors

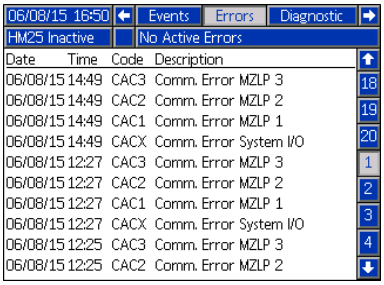


The Errors screens store a maximum of 200 errors. See **ADM Error Code Table** on page 44. The errors list can be downloaded in the USB logs. See **Appendix B - USB Downloading, Uploading** on page 133.

### Diagnostic

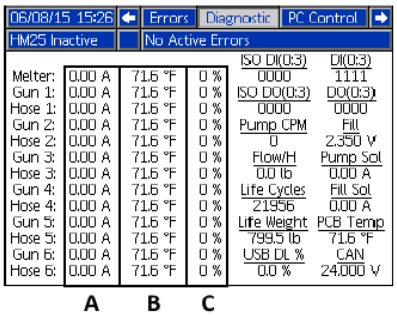


This screen shows details of various items to aid in troubleshooting the system. This screen can be hidden by de-selecting “Enable Diagnostics Screen” on the System 3 screen. The flow rate updates every 15-20 seconds with the average flow rate over the last 15-20 seconds.

The following information is displayed.

| | Diagnostic Data |
|---|---|
| **A** | Current Draw |
| **B** | RTD Reading |
| **C** | Duty Cycle |

**CAN:** 24 VDC power supply voltage reading (18-28 VDC)

**DI:** System Digital Inputs
0: Not Used
1: Not Used
2: Pump Cycle Switch Up
3: Pump Cycle Switch Down

**DO:** System Digital Outputs
0: Pump Solenoid
1: Fill Solenoid
2: Light Tower Green Light
3: Light Tower Red Light

**ISO DI:** Customer Digital Inputs
0: Customer Input 1
1: Customer Input 2
2: Customer Input 3
3: Customer Input 4

**ISO DO:** Customer Digital Outputs
0: Customer Input 1
1: Customer Input 2
2: Customer Input 3
3: Customer Input 4

**Fill:** Reading of Ultrasonic Fill Sensor
- Old Fill Sensor (2750-2400 mV)
- New Fill Sensor (4200-3800 mV)

**Fill Sol:** Current draw of fill solenoid
- (0 mA - off)
- (150-250 mA - on)

**Flow/H:** Melt rate of the system

**Life Cycles:** total number of pump cycles over life of system.

**Life Weight:** Weight of material dispensed over life of system.

**Pump Sol:** Current draw of pump solenoid
- (0 mA - off)
- (150-250 mA - on)

**PCB Temp:** PCB Temperature on MZLP1
- 32-16°F (0-71°C)

**Pump CPM:** Pump cycles per minute.

**USB DL%:** Percentage Complete, only applies when downloading USB data.

### Material Log

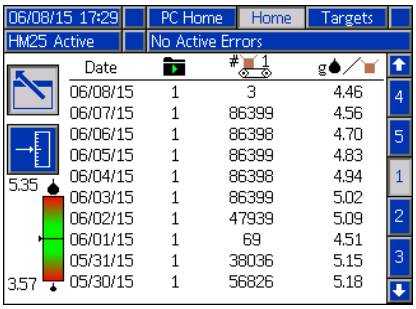


This screen shows a daily log of material usage. For more details see the **Material Tracking** section on page 29.

# Setup Screens

**NOTE:** It is important to set all settings in the System screens correctly to ensure optimal system performance.

### Password

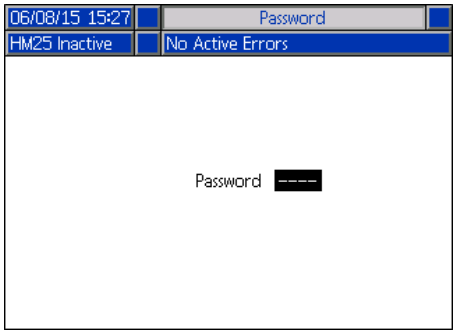


If the password is not “0000”, the password must be entered to access the setup screens.

### System 1

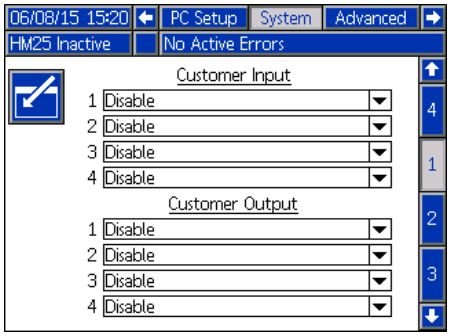


A PLC can be used to control or monitor the system. See **PLC Connection** on page 27 for instructions.

### System 2

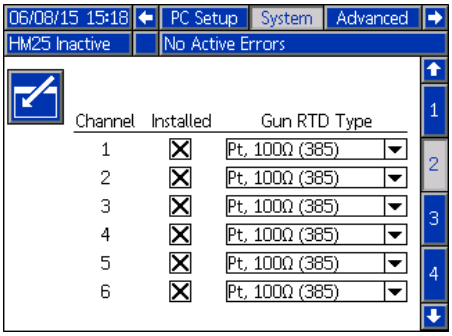


Use this screen to enable the installed channels and specify the type of applicator RTD type used. See **Select ADM Settings** on page 24.

### System 3

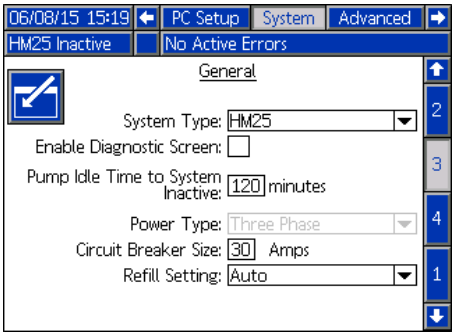


**System Type:** Choose the model of the system.
**Enable Diagnostic Screen:** Choose whether to hide the Diagnostic screen.
**Pump Idle Time to System Inactive:** The heating system will be disabled after the pump has been idle for the set amount of time
**Power Type:** Select the system power type.
**Circuit Breaker Size:** Select the circuit breaker size.
**Refill Setting:** To use the automatic vacuum transfer, select Auto. To disable the automatic vacuum transfer, select Manual. The main reason to disable automatic refill is while flushing. However, if an issue is present with the automatic refill system that cannot be solved in a timely manner, manual refill can be used to return the system to service. See **Manual Refill** on page 35.

See **Select ADM Settings** on page 24.

### System 4

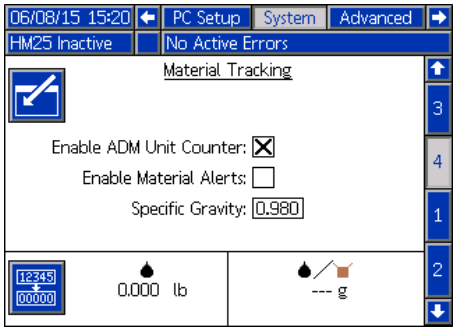


Use this screen to enable ADM unit counter, enable material alerts and calibrate material tracking.

**Enable ADM Unit Counter:** Select to enable ADM counting of units using an external sensor.
**Enable Material Alerts:** Select to enable record only events indicating low/high material usage.
**Specific Gravity:** Required to convert the volume dispensed to mass dispensed for tracking the total weight and flow rate.

### Maintenance

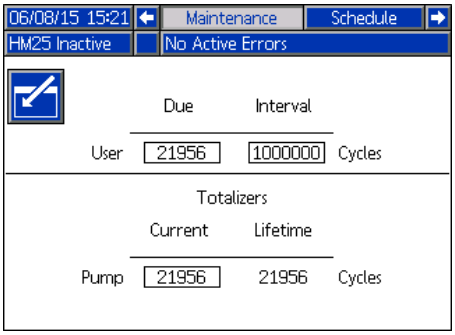


The system will notify the user at the set interval that maintenance is required. The fields in boxes can be edited by the user. “Due” and “Current” are both the number of cycles since the last reset. “Interval” is the set number of cycles between maintenance notifications. “Lifetime” is the number of cycles in the lifetime of the system.

**NOTE:** The lifetime cycle count will only be reset if the Advanced Display Module (ADM) is replaced.

### Schedule

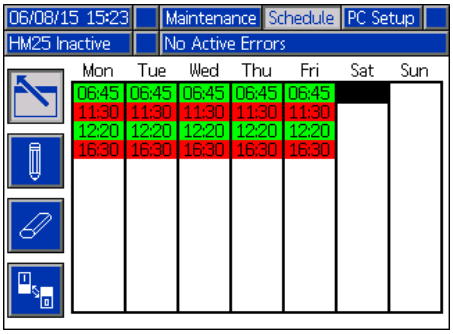


Use this screen to set times where the system will automatically enable and disable heating. See **Select ADM Settings** on page 24.

### Advanced 1

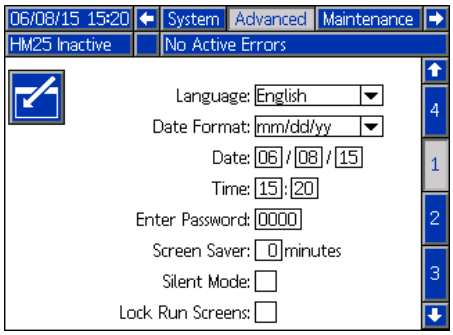


**Language:** Language displayed on the screen.
**Date Format:** Choose format of the date.
**Date:** Set the date.
**Time:** Set the time.
**Enter Password:** If not “0000”, the Setup screens will be password protected.
**Screen Saver:** The screen will go black after the set amount of time.
**Silent Mode:** Disable ADM sounds.
**Lock Run Screens:** Disable setpoint changes on the run (operation) screens. If the setup screens are password protected, the setpoints cannot be changed without first entering the password.

### Advanced 2

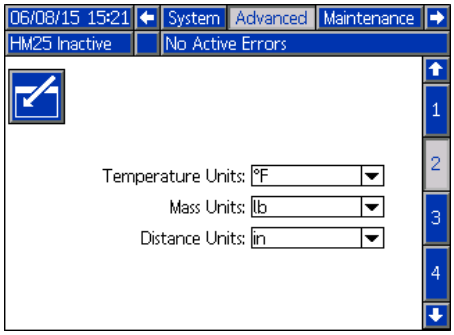


**Temperature Units:** Units of measure for displayed temperatures.
**Mass Units:** Units of measure for mass.
**Distance Units:** Units of measure for distance.

### Advanced 3

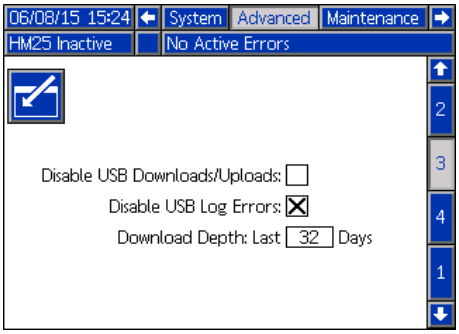


**Disable USB Downloads/Uploads:** Disables use of the USB for downloading and uploading.
**Disable USB Log Errors:** When disabled, the system will not warn the user when logs are full. If the logs are full, data will be overwritten.
**Download Depth: Last ___ Days:** The USB download will provide data as old as the number of days entered. Old data may be in memory but will not be downloaded if older than the number of days entered.

### Advanced 4

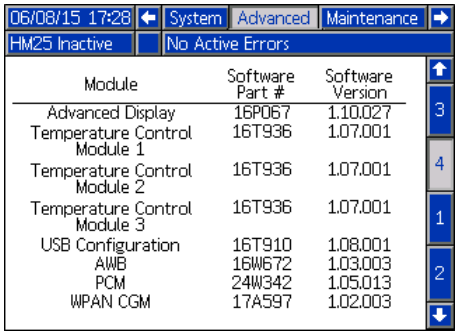


This screen shows the part number and version of each installed software module.

# Appendix B - USB Downloading, Uploading

The system can store 150,000 entries in its logs and the system adds a new entry to the logs every 15 seconds. This means the system stores 655 hours of system operation data, or 27 days of around-the-clock operation. Once full, the system will overwrite the oldest data.

**NOTE:** To prevent losing any data, never go more than 27 days without downloading the logs.

## Download Procedure

| *NOTICE* |
| --- |
| Uploading an edited system configuration file can damage the system. Never put a modified SETTINGS.TXT file in the UPLOAD folder on the flash drive. |

**NOTE:** The event log, error log, system settings, and system language files are all downloaded in this procedure. See **USB Logs**, **System Settings File**, and **System Language File** starting on page 134.

1. Insert USB flash drive into USB port. See FIG. 4.

**NOTE:** Flash drive must be 8 GB or smaller.

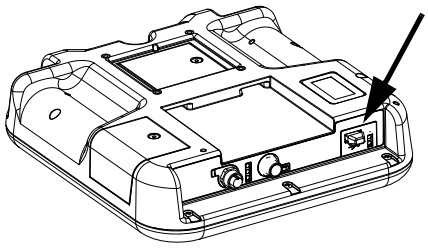

**FIG. 4: ADM USB Port**

2. The menu bar and USB indicator lights indicate that the USB is downloading files. Wait for USB activity to complete. A pop-up will be present until the transfer is complete if it is not acknowledged.

**NOTE:** If the pop-up screen does not appear, the flash drive is not compatible with the ADM. Try a different flash drive.

**NOTE:** The system can log up to 45 mb of additional data per week, depending on system operation.

## Accessing Files

All files downloaded from the USB are put in a DOWNLOAD folder on the stick drive. For example: “E:\GRACO\12345678\DOWNLOAD\”. The 8-digit numeric folder name matches the 8-digit ADM serial number, which is located on the back of the ADM. When downloading from multiple ADMs, there will be one sub-folder in the GRACO folder for each ADM.

The log files should be opened in a spreadsheet program.

**NOTE:** If emailing the files, zip (compress) them to minimize file size.

## Upload Procedure

| *NOTICE* |
| --- |
| Uploading an edited system configuration file can damage the system. Never put a modified SETTINGS.TXT file in the UPLOAD folder on the flash drive. |

Use this procedure to install a system configuration file and/or a custom language file. See **System Settings File** or **System Language File** starting on page 134.

1. If necessary, follow the **Download Procedure**, page 133, to automatically generate the proper folder structure on the USB flash drive.
2. Insert USB flash drive into USB port of computer.
3. The USB flash drive window automatically opens. If it does not, open USB flash drive from within Windows Explorer.
4. Open Graco folder.
5. Open system folder. If working with more than one system, there will be more than one folder within the Graco folder. Each folder is labeled with the corresponding serial number of the ADM. (The serial number is on the back of the module.)
6. *If installing the system settings file,* place SETTINGS.TXT file into UPLOAD folder.

7. *If installing the custom language file,* place DISPTEXT.TXT file into UPLOAD folder.
8. Remove USB flash drive from computer.
9. Install USB flash drive into InvisiPac system USB port.
10. The menu bar and USB indicator lights indicate that the USB is uploading files. Wait for USB activity to complete.
11. Remove USB flash drive from USB port.

If a custom language file was installed, users can now select the new language from the Language drop-down menu.

**NOTE:** If the SETTINGS.TXT or DISPTEXT.TXT files remain in the UPLOAD folder, they will be uploaded every time the USB drive is inserted into the corresponding ADM. To avoid unintentionally overwriting system settings, delete the files from the UPLOAD folders on the USB drive after the upload is complete.

# USB Logs

During operation, InvisiPac stores system and performance related information to memory in the form of log files. InvisiPac maintains the events, data, GCA, Black Box, and Diagnostics logs. Follow the **Download Procedure**, page 133, to retrieve log files.

## Events Log

The event log (1-EVENT.CSV) maintains a record of the last 175,000 events. Each event record in the log file contains the date and time the event occurred, the event type, event code, and event description.

## Data Log

The data log (2-DATA.CSV) tracks the setpoint and actual temperatures every 15 seconds. This log can store up to 250,000 lines of data.

The system stores 1041 hours of system operation data, or 43 days of around-the-clock operation. Once full, the system will overwrite the oldest data.

**NOTE:** To prevent losing any data, never go more than 43 days without downloading the logs.

## GCA Log

This log (3-GCA.CSV) lists the installed GCA modules and their respective software versions.

## Black Box, Diagnostics Logs

These logs (4-BLACKB.CSV, 5-DIAGN.CSV) are designed to provide useful information to Graco when calling for technical assistance.

# System Settings File

***NOTICE***

Uploading an edited system configuration file can damage the system. Never put a modified SETTINGS.TXT file in the UPLOAD folder on the flash drive.

The system configuration settings file name is SETTINGS.TXT and is stored in the DOWNLOAD folder.

A system configuration settings file automatically downloads each time a USB flash drive is inserted. Use this file to back up system settings for future recovery or to easily replicate settings across multiple InvisiPac systems. Refer to the **Upload Procedure**, page 133, for instructions on how to use this file.

It is recommended to retrieve the SETTINGS.TXT file after all system settings are set as desired. Store the file for future use as a backup in case the settings are changed and need to be quickly changed back to the desired setup.

System settings may not be compatible between different versions of the InvisiPac software.

# System Language File

The system language file name is DISPTEXT.TXT and is stored in the DOWNLOAD folder.

A system language file automatically downloads each time a USB flash drive is inserted. If desired, use this file to create a user-defined set of custom language strings to be displayed within the ADM.

The system is able to display the following Unicode characters. For characters outside of this set, the system will display the Unicode replacement character, which appears as a white question mark inside of a black diamond.

- U+0020 - U+007E (Basic Latin)
- U+00A1 - U+00FF (Latin-1 Supplement)
- U+0100 - U+017F (Latin Extended-A)
- U+0386 - U+03CE (Greek)
- U+0400 - U+045F (Cyrillic)

## Create Custom Language Strings

The custom language file is a tab-delimited text file that contains two columns. The first column consists of a list of strings in the language selected at the time of download. The second column can be used to enter the custom language strings. If a custom language was previously installed, this column contains the custom strings. Otherwise the second column is blank.

Modify the second column of the custom language file as needed and then follow the **Upload Procedure**, page 133, to install the file.

The format of the custom language file is critical. The following rules must be followed in order for the installation process to succeed.

- The file name must be DISPTEXT.TXT.
- The file format must be a tab-delimited text file using Unicode (UTF-16) character representation.
- The file must contain only two columns, with columns separated by a single tab character.
- Do not add or remove rows to the file.
- Do not change the order of the rows.
- Define a custom string for each row in the second column.

# Technical Data

| InvisiPac Hot Melt Delivery System | | |
|---|---|---|
| | **US** | **Metric** |
| **Incoming Power** | | |
| HM25: 24V423, 24Y102<br>HM50: 24T918, 24Y114 | 200-240 VAC, 1-ph, 50/60 Hz, 32A<br>200-240 VAC, 3-ph, Δ, 50/60 Hz, 27A<br>350-415 VAC, 3-ph, Y, 50/60 Hz, 16A | |
| HM25: 24V429, 24Y106<br>HM50: 24V201, 24Y118 | 400-480 VAC, 3-ph, Δ, 50/60 Hz, 14A | |
| HM25: 24V424, 24Y103<br>HM50: 24T919, 24Y115 | 200-240 VAC, 1-ph, 50/60 Hz, 40A<br>200-240 VAC, 3-ph, Δ, 50/60 Hz, 27A<br>350-415 VAC, 3-ph, Y, 50/60 Hz, 16A | |
| HM25: 24V430, 24Y107<br>HM50: 24V202, 24Y119 | 400-480 VAC, 3-ph, Δ, 50/60 Hz, 14A | |
| HM25: 24V425<br>HM50: 24T920 | 200-240 VAC, 1-ph, 50/60 Hz, 40A<br>200-240 VAC, 3-ph, Δ, 50/60 Hz, 40A<br>350-415 VAC, 3-ph, Y, 50/60 Hz, 30A | |
| HM25: 24V431<br>HM50: 24V203 | 400-480 VAC, 3-ph, Δ, 50/60 Hz, 14A | |
| HM25: 24V426, 24Y104<br>HM50: 24V198, 24Y116 | 335-400 VAC, 3-ph Y, 50/60 Hz, 17A | |
| HM25: 24V427, 24Y105<br>HM50: 24V199, 24Y117 | 335-400 VAC, 3-ph Y, 50/60 Hz, 17A | |
| HM25: 24V428<br>HM50: 24V200 | 335-400 VAC, 3-ph Y, 50/60 Hz, 17A | |
| **Electrical** | | |
| Minimum Applicator Wattage Per Channel at 240 VAC | 90 W | |
| Maximum Applicator Wattage Per Channel | 400 W | |
| Input / Output Capability | 4 inputs (0-30V), 4 outputs (240VAC, 24VDC, 2A) | |
| **Pump Flow Rate** | | |
| HM25 | 96 lb/hr | 43.5 kg/hr |
| HM50 | 130 lb/hr | 59 kg/hr |
| **Melt Rate / Constant Throughout** | | |
| HM25 | 25 lb/hr | 11.3kg/hr |
| HM50 | 50 lb/hr | 22.6 kg/hr |
| **Weight** | | |
| HM25 | 85 lb | 36 kg |
| HM50 | 105 lb | 48 kg |
| **General** | | |
| Adhesive | 1/4 in. (6 mm), round, adhesive pellets | |
| Pump Output | 19.3 cc/cycle | |
| Time to Temperature * | Less than 15 minutes | |
| Pump | Pneumatic Piston, 12:1 | |
| Channels | 1 to 6 | |

| InvisiPac Hot Melt Delivery System | | |
|---|---|---|
| | **US** | **Metric** |
| System Dimensions (Width x Height x Depth) ** | 19.0 x 42 x 16.5 in. | 483 x 1067 x 419 mm |
| **Pressure and Temperature Ranges** | | |
| Main System Air Supply Pressure Range (set with regulator on front of system) | 80-100 psi | 0.55-0.69 MPa (5.5-7 bar) |
| Pump Operating Air Pressure Range | 20-100 psi | 0.14-0.69 MPa (0.7-7 bar) |
| Pump Operating Fluid Pressure Range | 240-1200 psi | 1.7-8 MPa (17-80 bar) |
| Control Temperature Range | 100-400°F | 38-204°C |
| Ambient Temperature Range | 32-120°F | 0-49°C |
| **Vacuum Transfer Specifications** | | |
| Maximum Vacuum Transfer Hose Length | 30 ft | 9.1 m |
| Maximum Vacuum Transfer Hose Maximum Vertical Rise | 10 ft | 3.0 m |
| Vacuum Transfer Operating Pneumatic Pressure Range (set with regulator on front of system) | 40-100 psi | 280-690 kPa (2.8-6.9 bar) |
| Vacuum Transfer Air Consumption at 40 psi (280 kPa, 2.8 bar), | 9.5 scfm (intermittent duty; 4% at 25 lb/hr) | 16.1 scmh (intermittent duty; 4% at 11.3 kg/hr) |
| Vacuum Transfer Air Consumption at 80 psi (550 kPa, 5.5 bar) | 17.2 scfm (intermittent duty; 4% at 25 lb/hr) | 29.2 scmh (intermittent duty; 4% at 11.3 kg/hr) |
| **Required Air Tubing Size** | | |
| Minimum Air Tubing Inner Diameter (less than 50 ft, 15.2 m of tubing) | 3/8 in. | 9.5 mm |
| Minimum Air Tubing Inner Diameter (50 ft, 15.2 m or longer of tubing) | 1/2 in. | 12.7 mm |
| **Sound** | | |
| Sound Pressure Level*** | 77 dB(A) | |
| **IP Code** | | |
| InvisiPac Base System | IP54 | |
| **Wetted Parts** | | |
| Wetted Parts | PTFE, chemically resistant o-rings, aluminum, stainless steel, zinc plating, carbon steel, brass, carbide, chrome | |
| Approvals and Standards | UL499, CSA88, CE, ISO | |
| | | |

* From 70°F to 350°F (21°C to 177°C), dependant upon power supply and machine configuration.
** Excludes vacuum transfer tube, shaker assembly, and pellet storage bin.
*** Sound pressure level measured 3.1 ft (1 meter) from equipment.

# Startup Time

## Single Phase

Times are approximate and may vary with ambient conditions, voltage configuration, and machine configuration.

| System | Channels (#) | Hose Length ft (m) | Start Time in Minutes | | | | | | | |
|---|---|---|---|---|---|---|---|---|---|---|
| | | | 20 Amp Breaker 240V | 30 Amp Breaker 240V | 40 Amp Breaker 240V | 50 Amp Breaker 240V | 20 Amp Breaker 208V | 30 Amp Breaker 208V | 40 Amp Breaker 208V | 50 Amp Breaker 208V |
| HM25 | 1 | 4 (1.2) | 11 | 9.9 | 9.9 | 9.9 | 13 | 13 | 13 | 13 |
| | 1 | 12 (3.6) | 13 | 9.9 | 9.9 | 9.9 | 14 | 13 | 13 | 13 |
| | 1 | 25 (7.6) | 15 | 9.9 | 9.9 | 9.9 | 17 | 13 | 13 | 13 |
| | 2 | 4 (1.2) | 13 | 9.9 | 9.9 | 9.9 | 15 | 13 | 13 | 13 |
| | 2 | 12 (3.6) | 16 | 9.9 | 9.9 | 9.9 | 18 | 13 | 13 | 13 |
| | 2 | 25 (7.6) | 20 | 13 | 9.9 | 9.9 | 23 | 13 | 13 | 13 |
| | 3 | 4 (1.2) | 15 | 9.9 | 9.9 | 9.9 | 17 | 13 | 13 | 13 |
| | 3 | 12 (3.6) | 19 | 12 | 9.9 | 9.9 | 22 | 13 | 13 | 13 |
| | 3 | 25 (7.6) | 26 | 16 | 12 | 9.9 | 29 | 19 | 13 | 13 |
| | 4 | 4 (1.2) | 16 | 9.9 | 9.9 | 9.9 | 18 | 13 | 13 | 13 |
| | 4 | 12 (3.6) | 22 | 14 | 9.9 | 9.9 | 25 | 16 | 13 | 13 |
| | 4 | 25 (7.6) | 31 | 20 | 14 | 12 | 35 | 23 | 16 | 13 |
| | 5 | 4 (1.2) | 18 | 11 | 9.9 | 9.9 | 20 | 13 | 13 | 13 |
| | 5 | 12 (3.6) | 25 | 16 | 11 | 9.9 | 28 | 18 | 13 | 13 |
| | 5 | 25 (7.6) | 36 | 23 | 17 | 14 | 41 | 27 | 19 | 15 |
| | 6 | 4 (1.2) | 20 | 12 | 9.9 | 9.9 | 22 | 13 | 13 | 13 |
| | 6 | 12 (3.6) | 28 | 18 | 13 | 10 | 32 | 20 | 13 | 13 |
| | 6 | 25 (7.6) | 41 | 27 | 20 | 16 | 47 | 31 | 22 | 18 |
| HM50 | 1 | 4 (1.2) | 17 | 15 | 15 | 15 | 20 | 20 | 20 | 20 |
| | 1 | 12 (3.6) | 19 | 15 | 15 | 15 | 21 | 20 | 20 | 20 |
| | 1 | 25 (7.6) | 21 | 15 | 15 | 15 | 24 | 20 | 20 | 20 |
| | 2 | 4 (1.2) | 19 | 15 | 15 | 15 | 21 | 20 | 20 | 20 |
| | 2 | 12 (3.6) | 23 | 15 | 15 | 15 | 26 | 20 | 20 | 20 |
| | 2 | 25 (7.6) | 27 | 17 | 15 | 15 | 30 | 20 | 20 | 20 |
| | 3 | 4 (1.2) | 21 | 15 | 15 | 15 | 24 | 20 | 20 | 20 |
| | 3 | 12 (3.6) | 27 | 17 | 15 | 15 | 30 | 20 | 20 | 20 |
| | 3 | 25 (7.6) | 32 | 21 | 15 | 15 | 36 | 23 | 20 | 20 |
| | 4 | 4 (1.2) | 23 | 15 | 15 | 15 | 26 | 20 | 20 | 20 |
| | 4 | 12 (3.6) | 30 | 19 | 15 | 15 | 34 | 22 | 20 | 20 |
| | 4 | 25 (7.6) | 37 | 24 | 18 | 15 | 42 | 27 | 20 | 20 |
| | 5 | 4 (1.2) | 25 | 16 | 15 | 15 | 28 | 20 | 20 | 20 |
| | 5 | 12 (3.6) | 34 | 22 | 16 | 15 | 38 | 25 | 20 | 20 |
| | 5 | 25 (7.6) | 42 | 28 | 20 | 16 | 48 | 31 | 23 | 20 |
| | 6 | 4 (1.2) | 27 | 17 | 15 | 15 | 30 | 20 | 20 | 20 |
| | 6 | 12 (3.6) | 37 | 24 | 18 | 15 | 42 | 27 | 20 | 20 |
| | 6 | 25 (7.6) | 47 | 31 | 23 | 18 | 54 | 36 | 26 | 21 |

## Three Phase

Times are approximate and may vary with ambient conditions, voltage configuration, and machine configuration.

| System | Channels (#) | Hose Length ft (m) | Start Time in Minutes | | | | | | | |
|---|---|---|---|---|---|---|---|---|---|---|
| | | | 20 Amp Breaker 240V | 30 Amp Breaker 240V | 40 Amp Breaker 240V | 50 Amp Breaker 240V | 20 Amp Breaker 208V | 30 Amp Breaker 208V | 40 Amp Breaker 208V | 50 Amp Breaker 208V |
| HM25 | 1 | 4 (1.2) | 11 | 9.9 | 9.9 | 9.9 | 13 | 13 | 13 | 13 |
| | 1 | 12 (3.6) | 13 | 9.9 | 9.9 | 9.9 | 14 | 13 | 13 | 13 |
| | 1 | 25 (7.6) | 15 | 9.9 | 9.9 | 9.9 | 16 | 13 | 13 | 13 |
| | 2 | 4 (1.2) | 13 | 9.9 | 9.9 | 9.9 | 14 | 13 | 13 | 13 |
| | 2 | 12 (3.6) | 16 | 11 | 9.9 | 9.9 | 17 | 13 | 13 | 13 |
| | 2 | 25 (7.6) | 20 | 14 | 10 | 9.9 | 22 | 14 | 13 | 13 |
| | 3 | 4 (1.2) | 14 | 9.9 | 9.9 | 9.9 | 16 | 13 | 13 | 13 |
| | 3 | 12 (3.6) | 18 | 12 | 9.9 | 9.9 | 20 | 13 | 13 | 13 |
| | 3 | 25 (7.6) | 25 | 17 | 13 | 9.9 | 26 | 18 | 13 | 13 |
| | 4 | 4 (1.2) | 15 | 10 | 9.9 | 9.9 | 17 | 13 | 13 | 13 |
| | 4 | 12 (3.6) | 21 | 14 | 11 | 9.9 | 23 | 15 | 13 | 13 |
| | 4 | 25 (7.6) | 30 | 20 | 15 | 12 | 34 | 22 | 17 | 13 |
| | 5 | 4 (1.2) | 17 | 11 | 9.9 | 9.9 | 19 | 13 | 13 | 13 |
| | 5 | 12 (3.6) | 23 | 16 | 12 | 9.9 | 27 | 18 | 14 | 13 |
| | 5 | 25 (7.6) | 34 | 23 | 17 | 14 | 40 | 27 | 20 | 16 |
| | 6 | 4 (1.2) | 18 | 12 | 9.9 | 9.9 | 21 | 14 | 13 | 13 |
| | 6 | 12 (3.6) | 26 | 17 | 13 | 11 | 30 | 20 | 15 | 13 |
| | 6 | 25 (7.6) | 39 | 26 | 19 | 16 | 46 | 31 | 23 | 19 |
| HM50 | 1 | 4 (1.2) | 17 | 15 | 15 | 15 | 20 | 20 | 20 | 20 |
| | 1 | 12 (3.6) | 19 | 15 | 15 | 15 | 20 | 20 | 20 | 20 |
| | 1 | 25 (7.6) | 21 | 15 | 15 | 15 | 22 | 20 | 20 | 20 |
| | 2 | 4 (1.2) | 19 | 15 | 15 | 15 | 20 | 20 | 20 | 20 |
| | 2 | 12 (3.6) | 23 | 15 | 15 | 15 | 24 | 20 | 20 | 20 |
| | 2 | 25 (7.6) | 26 | 18 | 15 | 15 | 28 | 20 | 20 | 20 |
| | 3 | 4 (1.2) | 20 | 15 | 15 | 15 | 22 | 20 | 20 | 20 |
| | 3 | 12 (3.6) | 26 | 17 | 15 | 15 | 28 | 20 | 20 | 20 |
| | 3 | 25 (7.6) | 31 | 21 | 16 | 15 | 34 | 23 | 20 | 20 |
| | 4 | 4 (1.2) | 22 | 15 | 15 | 15 | 24 | 20 | 20 | 20 |
| | 4 | 12 (3.6) | 28 | 19 | 15 | 15 | 32 | 22 | 20 | 20 |
| | 4 | 25 (7.6) | 35 | 24 | 18 | 15 | 40 | 27 | 20 | 20 |
| | 5 | 4 (1.2) | 22 | 16 | 15 | 15 | 26 | 20 | 20 | 20 |
| | 5 | 12 (3.6) | 31 | 21 | 16 | 15 | 36 | 24 | 20 | 20 |
| | 5 | 25 (7.6) | 40 | 27 | 20 | 16 | 47 | 31 | 24 | 20 |
| | 6 | 4 (1.2) | 24 | 16 | 15 | 15 | 28 | 20 | 20 | 20 |
| | 6 | 12 (3.6) | 34 | 23 | 17 | 15 | 40 | 27 | 20 | 20 |
| | 6 | 25 (7.6) | 45 | 30 | 23 | 18 | 53 | 35 | 27 | 21 |

# Dimensions

## 240V System Dimensions

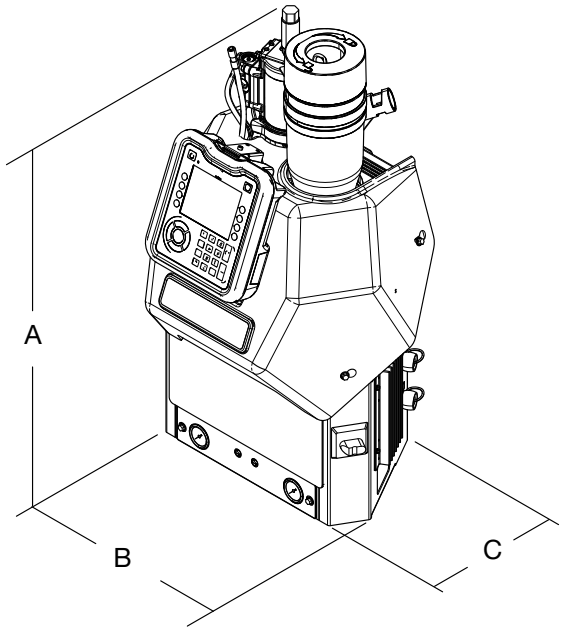


ti23554a

| | HM25 | HM50 |
|---|---|---|
| A | 35.5 in. (901.7 mm) | 35.8 in. (909.3 mm) |
| B | 20.8 in. (528.3 mm) | 22.3 in. (566.4 mm) |
| C | 17.6 in. (447.0mm) | 18.3 in. (464.8 mm) |

## System With 480V Transformer

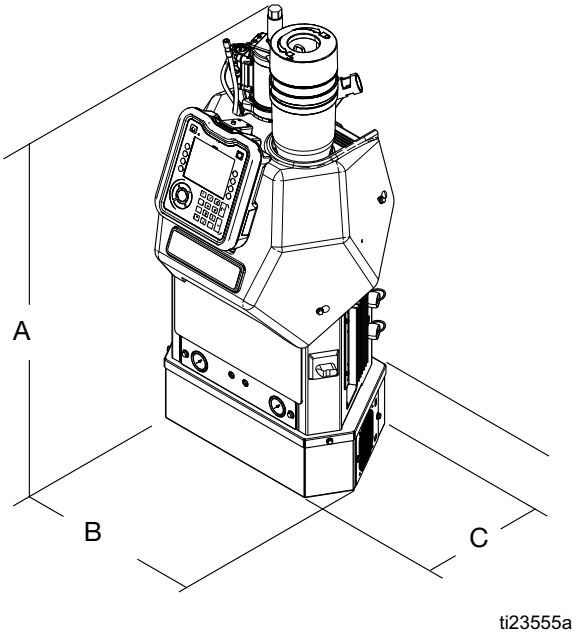


ti23555a

| | HM25 | HM50 |
|---|---|---|
| A | 41.6 in. (1056.6 mm) | 41.9 in. (1064.3 mm) |
| B | 20.9 in. (530.9 mm) | 22.3 in. (566.4 mm) |
| C | 17.6 in. (447.0 mm) | 18.3 in. (464.8 mm) |

## Mounting Hole Dimensions

**WALL**

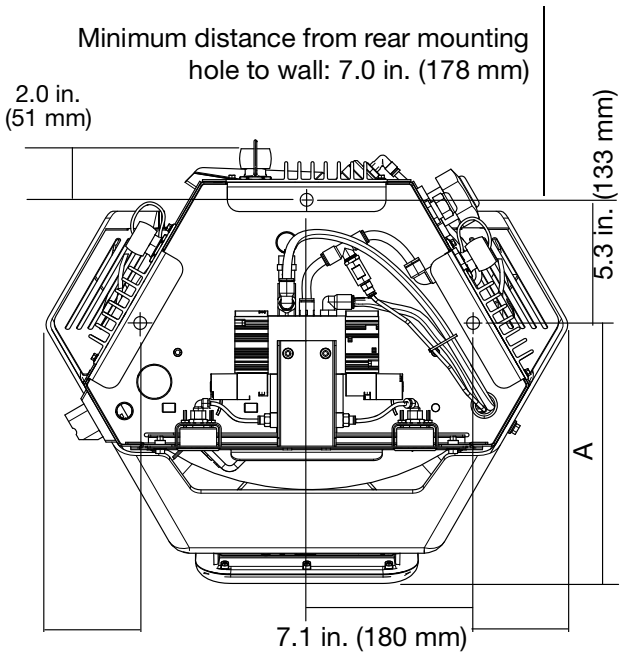

# California Proposition 65

CALIFORNIA RESIDENTS

⚠ **WARNING:** Cancer and reproductive harm – www.P65warnings.ca.gov.

# Graco Extended Warranty

Graco warrants all equipment referenced in this document which is manufactured by Graco and bearing its name to be free from defects in material and workmanship on the date of sale to the original purchaser for use. With the exception of any special, extended, or limited warranty published by Graco, Graco will, for a period of eighteen months from the date of sale, repair or replace any part of the equipment determined by Graco to be defective. This warranty applies only when the equipment is installed, operated and maintained in accordance with Graco's written recommendations.

This warranty does not cover, and Graco shall not be liable for general wear and tear, or any malfunction, damage or wear caused by faulty installation, misapplication, abrasion, corrosion, inadequate or improper maintenance, negligence, accident, tampering, or substitution of non-Graco component parts. Nor shall Graco be liable for malfunction, damage or wear caused by the incompatibility of Graco equipment with structures, accessories, equipment or materials not supplied by Graco, or the improper design, manufacture, installation, operation or maintenance of structures, accessories, equipment or materials not supplied by Graco.

This warranty is conditioned upon the prepaid return of the equipment claimed to be defective to an authorized Graco distributor for verification of the claimed defect. If the claimed defect is verified, Graco will repair or replace free of charge any defective parts. The equipment will be returned to the original purchaser transportation prepaid. If inspection of the equipment does not disclose any defect in material or workmanship, repairs will be made at a reasonable charge, which charges may include the costs of parts, labor, and transportation.**THIS WARRANTY IS EXCLUSIVE, AND IS IN LIEU OF ANY OTHER WARRANTIES, EXPRESS OR IMPLIED, INCLUDING BUT NOT LIMITED TO WARRANTY OF MERCHANTABILITY OR WARRANTY OF FITNESS FOR A PARTICULAR PURPOSE**.

Graco's sole obligation and buyer's sole remedy for any breach of warranty shall be as set forth above. The buyer agrees that no other remedy (including, but not limited to, incidental or consequential damages for lost profits, lost sales, injury to person or property, or any other incidental or consequential loss) shall be available. Any action for breach of warranty must be brought within two (2) years of the date of sale.

**GRACO MAKES NO WARRANTY, AND DISCLAIMS ALL IMPLIED WARRANTIES OF MERCHANTABILITY AND FITNESS FOR A PARTICULAR PURPOSE, IN CONNECTION WITH ACCESSORIES, EQUIPMENT, MATERIALS OR COMPONENTS SOLD BUT NOT MANUFACTURED BY GRACO**. These items sold, but not manufactured by Graco (such as electric motors, switches, hose, etc.), are subject to the warranty, if any, of their manufacturer. Graco will provide purchaser with reasonable assistance in making any claim for breach of these waln no event will Graco be liable for indirect, incidental, special or consequential damages resulting from Graco supplying equipment hereunder, or the furnishing, performance, or use of any products or other goods sold hereto, whether due to a breach of contract, breach of warranty, the negligence of Graco, or otherwise.

**FOR GRACO CANADA CUSTOMERS**
The Parties acknowledge that they have required that the present document, as well as all documents, notices and legal proceedings entered into, given or instituted pursuant hereto or relating directly or indirectly hereto, be drawn up in English. Les parties reconnaissent avoir convenu que la rédaction du présente document sera en Anglais, ainsi que tous documents, avis et procédures judiciaires exécutés, donnés ou intentés, à la suite de ou en rapport, directement ou indirectement, avec les procédures concernées.rranties.

# Graco Information

**For more information about InvisiPac,visit** www.InvisiPac@graco.com.
**TO PLACE AN ORDER,** contact your Graco distributor or call to identify the nearest distributor.
For technical assistance or customer service, call toll free Phone: 1-800-328-0211.

*All written and visual data contained in this document reflects the latest product information available at the time of publication.*
*Graco reserves the right to make changes at any time without notice.*

Original instructions. This manual contains English. MM 333347
**Graco Headquarters:** Minneapolis
**International Offices:** Belgium, China, Japan, Korea

**GRACO INC. AND SUBSIDIARIES • P.O. BOX 1441 • MINNEAPOLIS MN 55440-1441 • USA**
**Copyright 2023, Graco Inc. All Graco manufacturing locations are registered to ISO 9001.**

www.graco.com
Revision ZAE, August 2026