	ELECTRICAL			AIR	
MACHINE TYPE	VOLTAGE	FULL LOAD AMPS	SHORT CIRCUIT STABILITY	PRESSURE	RATE
HP20E	240 V	66 A	5 kA rms	90 PSI	5 SCFM
	480 V	38 A	5 kA rms	- - - PSI	- - - SCFM
PANNING CONVEYOR	240 V	10 A	5 kA rms	- - - PSI	- - - SCFM

REVISIONS						
REVISION	DESCRIPTION	ECO #	REVISED BY	REVISED DATE	CHECKED BY	CHECKED DATE
A	INITIAL RELEASE					

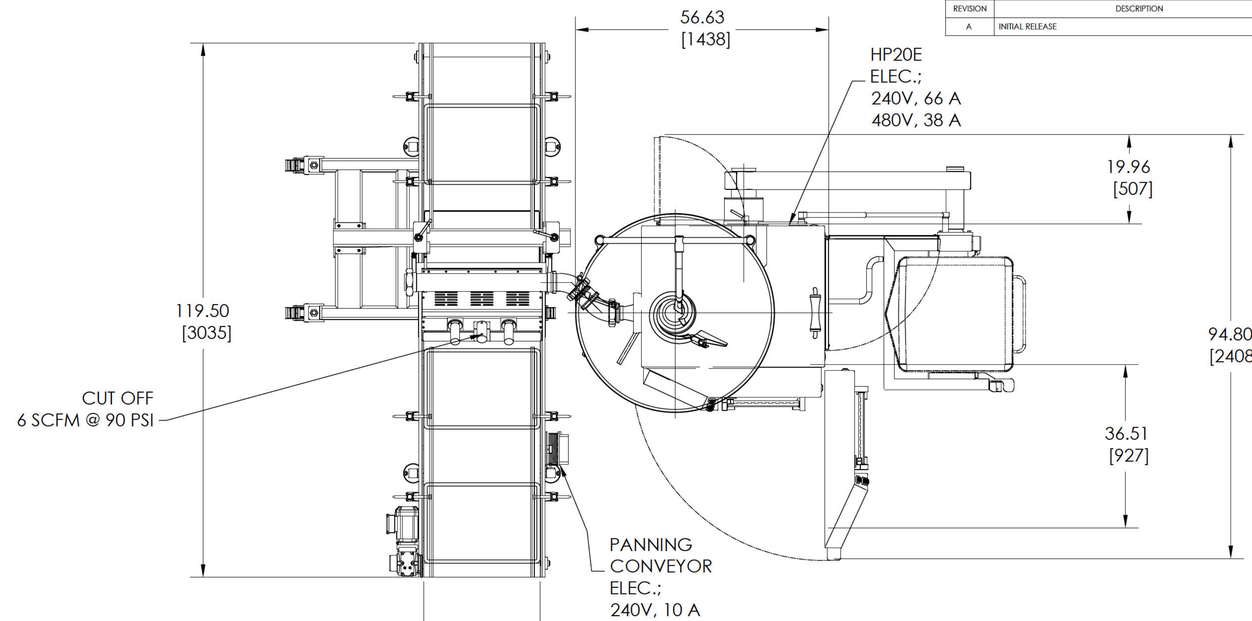

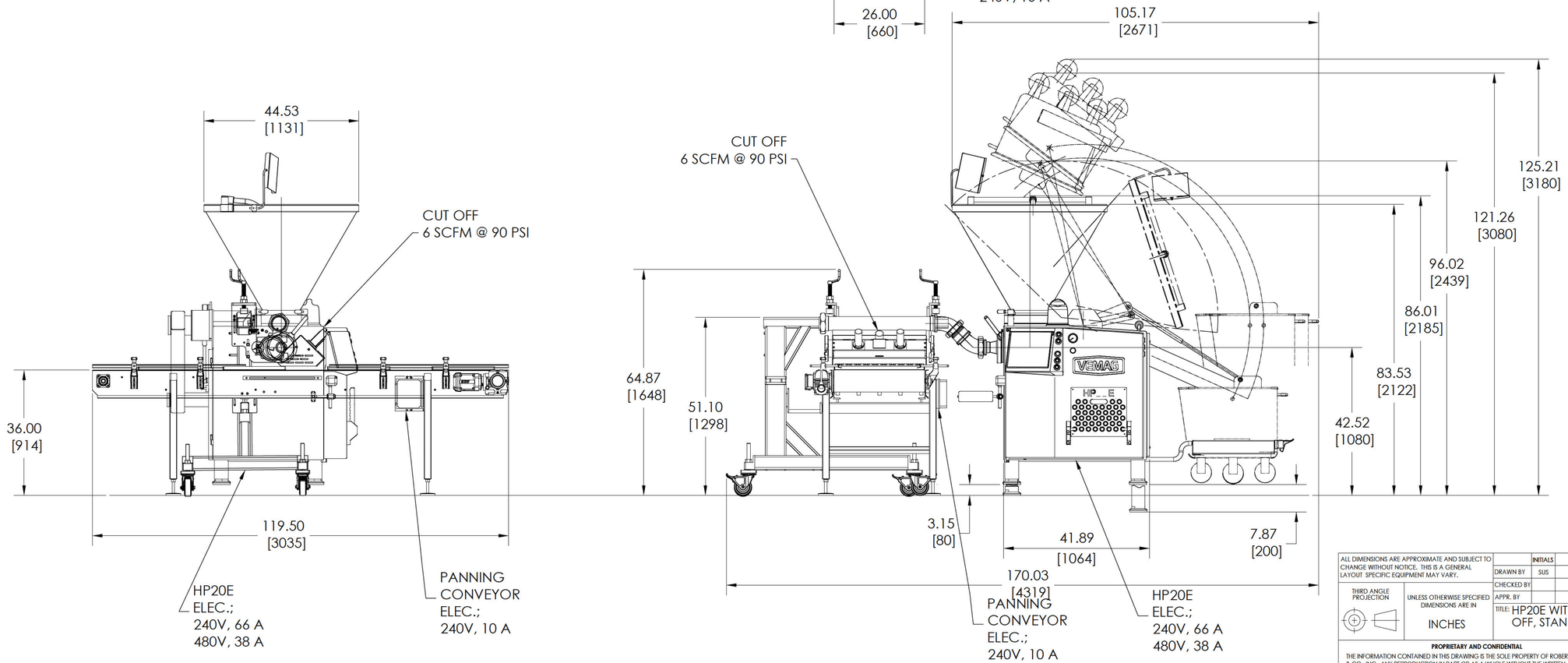

ALL DIMENSIONS ARE APPROXIMATE AND SUBJECT TO CHANGE WITHOUT NOTICE. THIS IS A GENERAL LAYOUT SPECIFIC EQUIPMENT MAY VARY.

THIRD ANGLE PROJECTION

UNLESS OTHERWISE SPECIFIED DIMENSIONS ARE IN INCHES

	INITIALS	DATE
DRAWN BY	SUS	
CHECKED BY		
APPR. BY		

REISER
725 DEDHAM ST. CANTON, MA 02021
(781) 821-1290. FAX: (781) 821-1316

TITLE: HP20E WITH LOADER, 10UPWW, CUT OFF, STAND & PANNING CONVEYOR

PROPRIETARY AND CONFIDENTIAL
THE INFORMATION CONTAINED IN THIS DRAWING IS THE SOLE PROPERTY OF ROBERT REISER & CO INC. ANY REPRODUCTION IN PART OR AS A WHOLE WITHOUT THE WRITTEN PERMISSION OF ROBERT REISER & CO INC IS PROHIBITED

SIZE D | DWG. NO. | REV. A

SCALE: 3/4" = 1' - 0", 1:16